UNITED ORTHOPEDIC®

U2™ Knee

Total Knee System

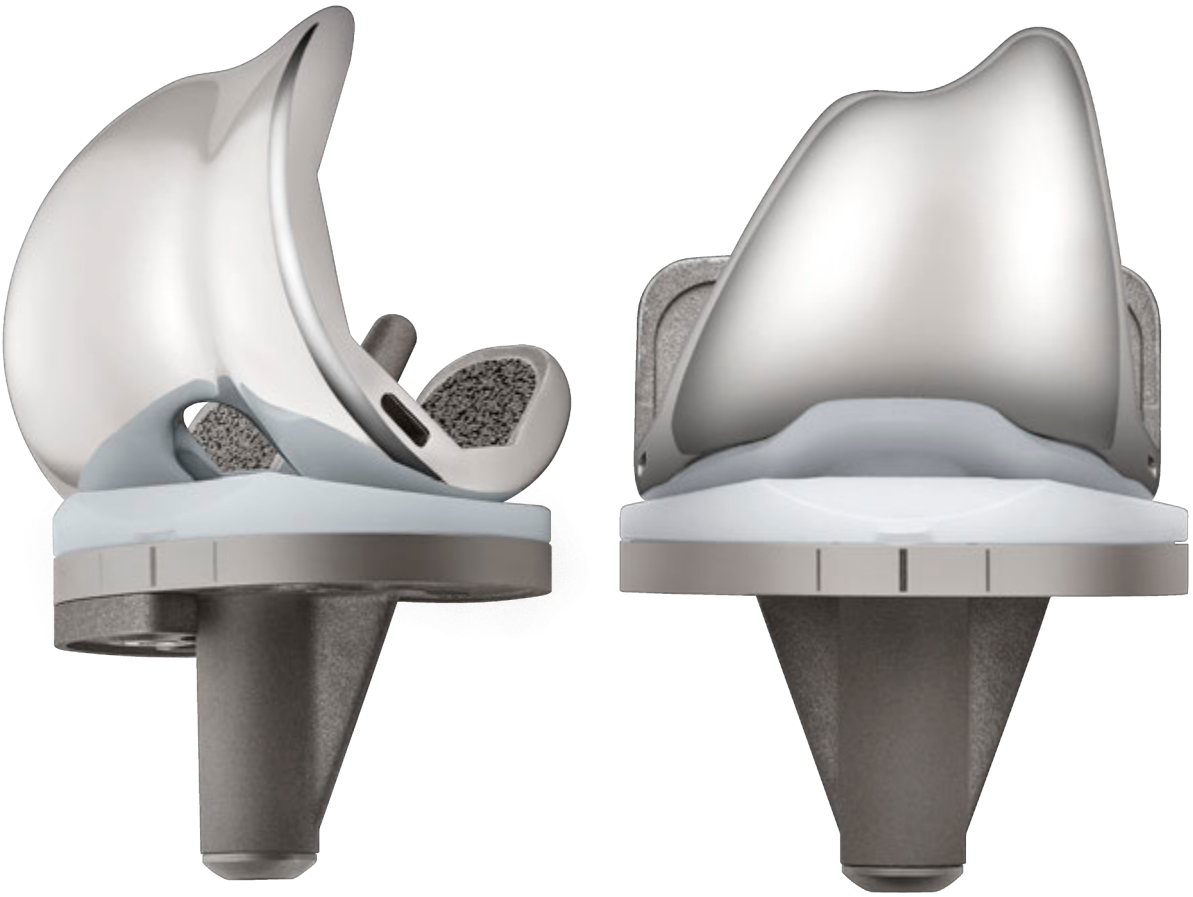

Anterior Referencing Surgical Technique Guide

Table of Contents

Device Description IV

U2 Knee System Overview VI

Surgical Overview VIII

Surgical Protocol

A. Distal Femoral Resection 1

B. Proximal Tibial Resection 5

C. Extension Gap Assessment 13

D. Femoral Sizing and Chamfer Resection 14

E. Extension and Flexion Gaps Confirmation 16

F. Trial Reduction 17

G. CR Pegs Preparation 19

H. PS Box Preparation 20

I. Proximal Tibial Preparation 23

J. Onset Patellar Preparation 26

K. Inset Patellar Preparation 28

L. Implantation 32

Appendix 38

Order Information 43

Device Description

Comprehensive Total Knee System –

The U2 Knee system is a comprehensive and organized total knee system for restoring the knee function throughout a full range of motion.

Based on the anatomy, kinematics, biomechanics, engineering and material technologies, the U2 Knee system offers fixed bearing, mobile bearing and revision prosthesis to satisfy different demands.

Since the launch of the U2 Knee System in 2005, over 170,000 cases have been implanted in 40 countries worldwide.
The U2 Knee has demonstrated excellent long-term clinical outcomes. The survival rate is 97.7% at 10 years follow up[1].

United strives to create a more efficient and precise experience for utilization with orthopedic implants and instruments that are designed to relieve pain and improve knee function in patients.

INDICATIONS

The U2 Total Knee system is indicated in knee arthroplasty for reduction or relief of pain and/or improved knee function in skeletally mature patients with severe knee pain and disability due to rheumatoid arthritis, osteoarthritis, primary and secondary traumatic arthritis, polyarthritis, collagen disorders, avascular necrosis of the femoral condyle or pseudogout, posttraumatic loss of joint configuration, particularly when there is patellofemoral erosion, dysfunction or prior patellectomy, moderate valgus, varus, or flexion deformities. This device may also be indicated in the salvage of previously failed surgical attempts if the knee cannot be satisfactorily balanced and stabilized at the time of surgery.

The device includes Cruciate Retained (CR) type, Posterior Stabilized (PS) type and Ultracongruent (UC) type. CR and UC types are designed to collocate with CR femoral component, while PS type is designed to collocate with PS femoral component.

- For cemented type femoral components, patellar components, tibial baseplate components, tibial inserts components and all poly tibial component: This device is a single use implant and intended for cemented use only.
- For cementless type component and porous coated femoral component: This device is a single use implant and intended for cementless use only.

Please refer to the package inserts for important product information, including, but not limited to contraindications, warnings, precautions, and adverse effects.

U2 Knee System Overview

Cruciate Retaining (CR)

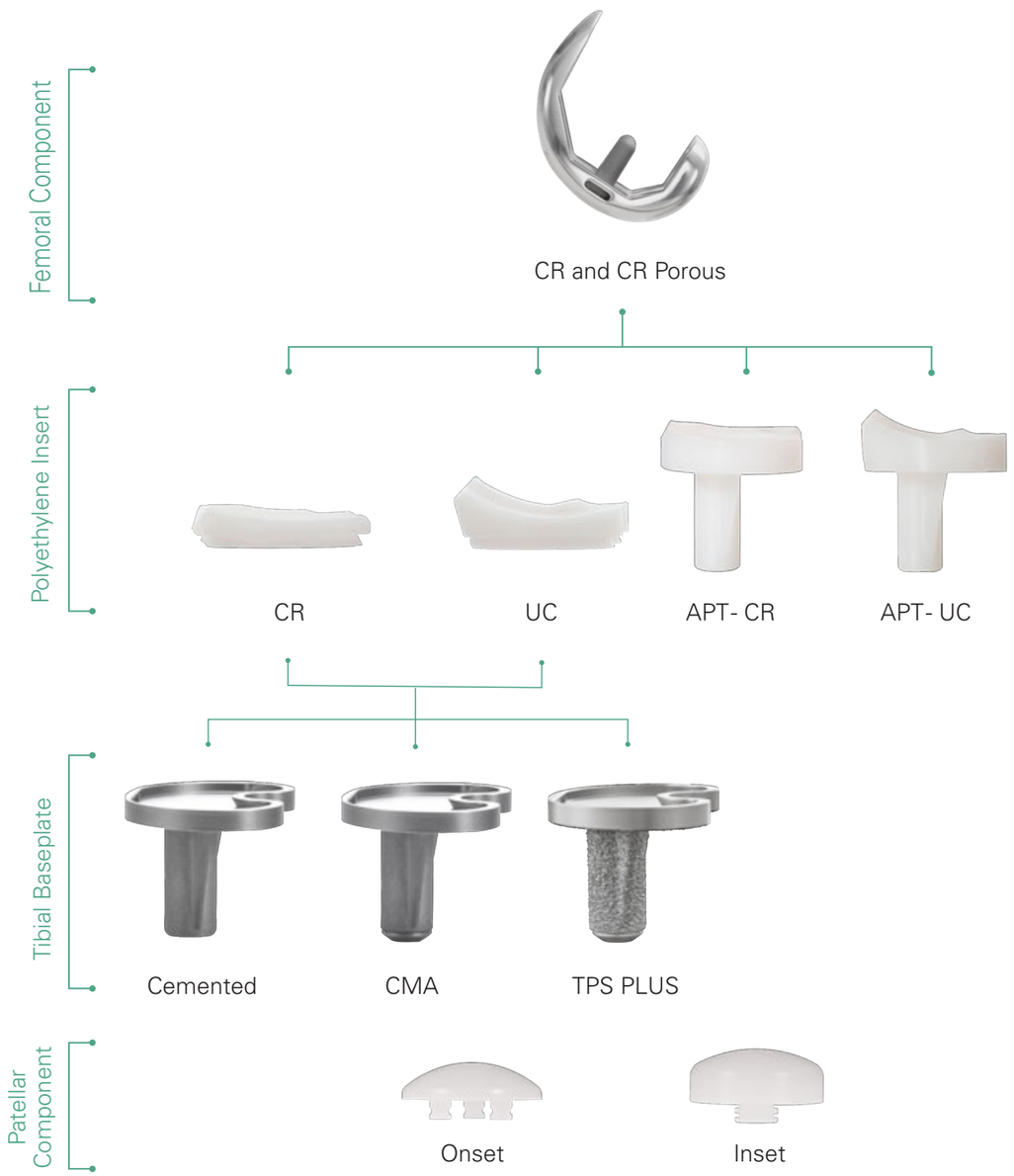

Posterior Stabilized (PS)

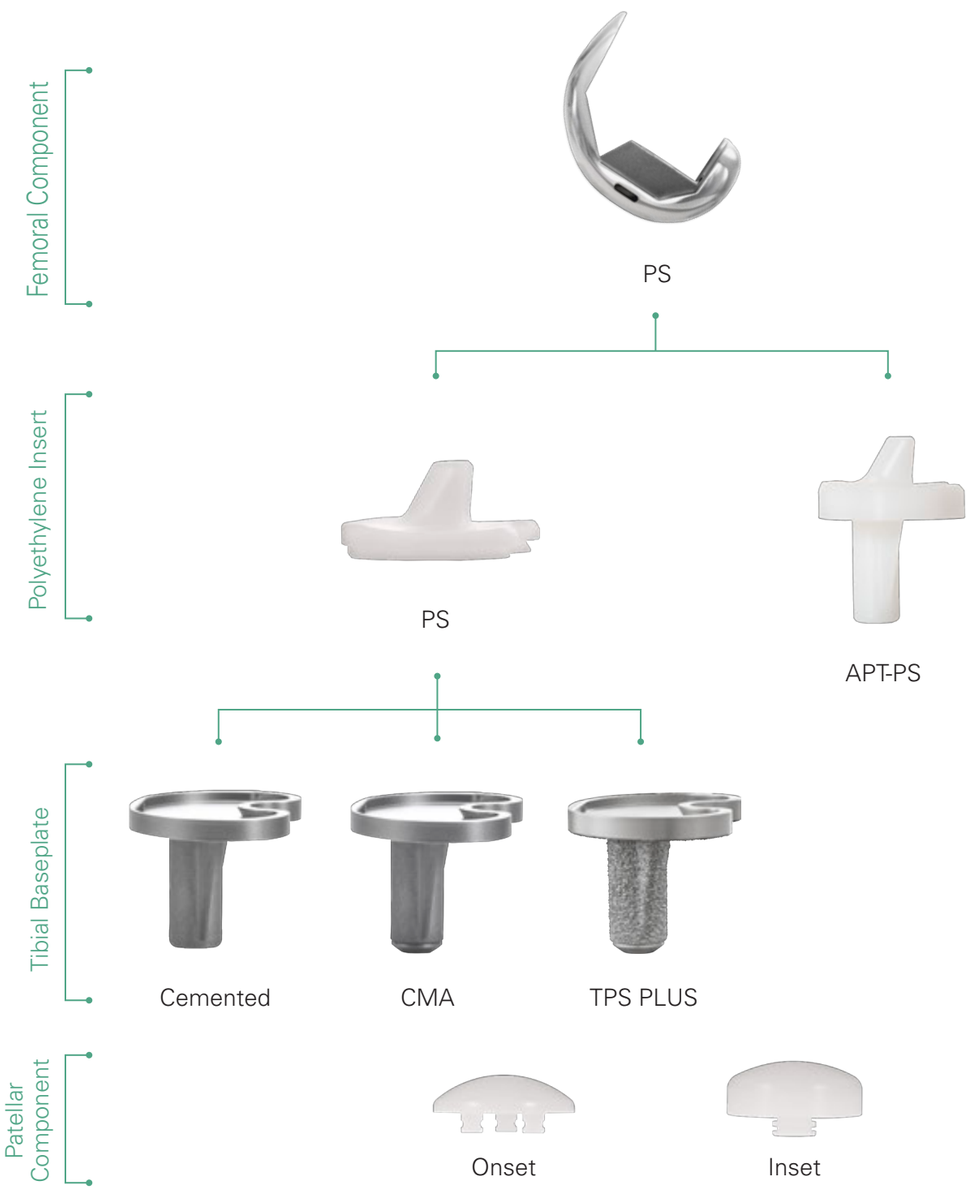

Surgical Overview

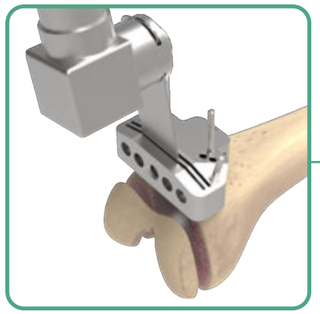

A. Distal Femoral Resection

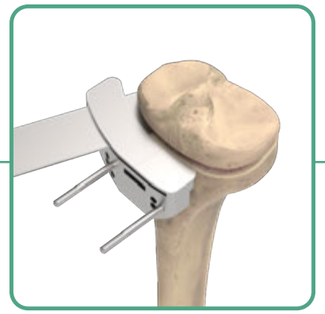

B. Proximal Tibial Resection

C. Extension Gap Assessment

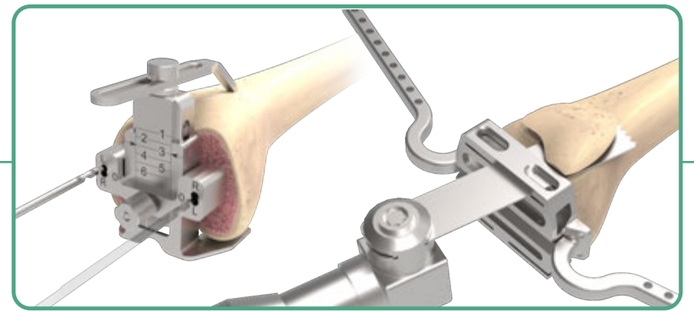

D. Femoral Sizing and Chamfer Resection

E. Extension and Flexion Gaps Confirmation

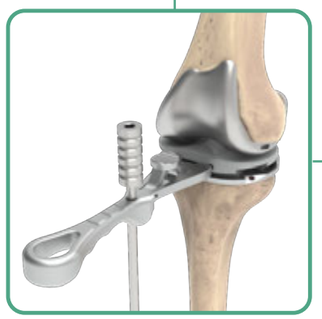

F. Trial Reduction

G. CR Pegs Preparation

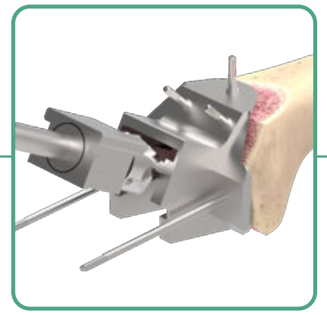

H. PS Box Preparation

I. Proximal Tibial Preparation

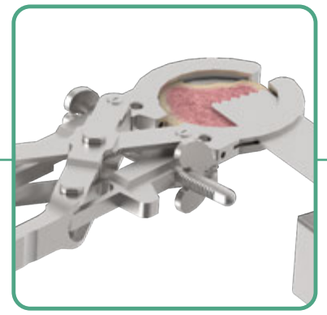

J. Onset Patellar Preparation

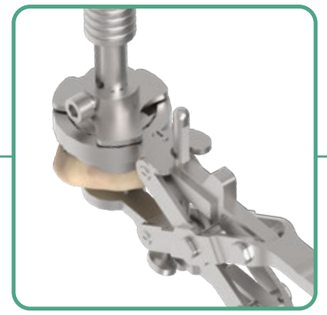

K. Inset Patellar Preparation

L. Implantation

A. Distal Femoral Resection

Access Canal

With the ACL removed, the location of the typical femoral entry hole is deemed to be slightly medial to the center of the intercondylar notch, and approximately 5 to 7 mm anterior to the insertion of the PCL.

Use the **Step Drill** to create an opening into the femoral canal. This allows for depressurization of the canal when the **Femoral IM Rod** is inserted.

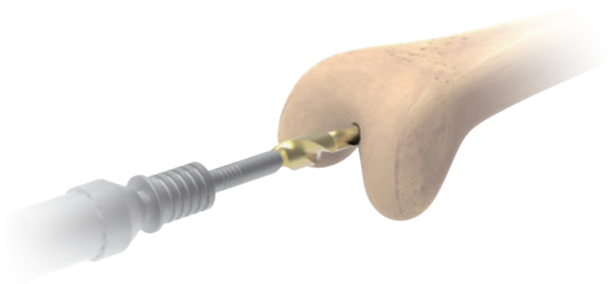

Assemble the **Femoral IM Rod and T-Handle**, and manually insert past the isthmus of the femoral canal.

Note:
If the canal isthmus diameter is thought to be too narrow for standard passage of the rod, advancement may be discontinued, and an intraoperative radiograph may be employed to access the appropriate location of the rod.

Instruments

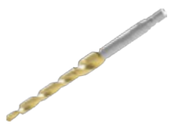

Step Drill

Femoral IM Rod

T-Handle

A. Distal Femoral Resection

Set Femoral Valgus Angle

Remove the **T-Handle** and slip the **Femoral IM Alignment Guide** through the **Femoral IM Rod**. Use the **Femoral IM Alignment Guide** to set the angle of the distal femoral resection for either a Left or Right Knee. The guide allows up to 11° of valgus angle adjustment. The ideal angle should be determined according to pre-operative planning.

When the alignment guide is properly engaged with the distal femur, use a **Threaded Pin** to secure the assemblies.

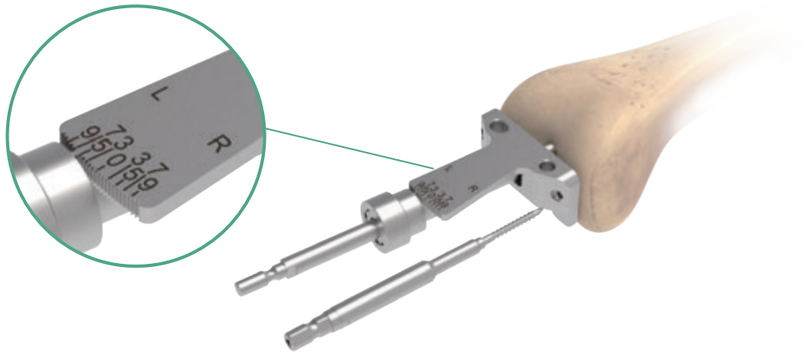

Assemble both **Alignment Rod** and the **Extramedullary Alignment Tower** to the **Femoral IM Alignment Guide**.
The **Alignment Rod** can now be used to confirm the proper mechanical axis.

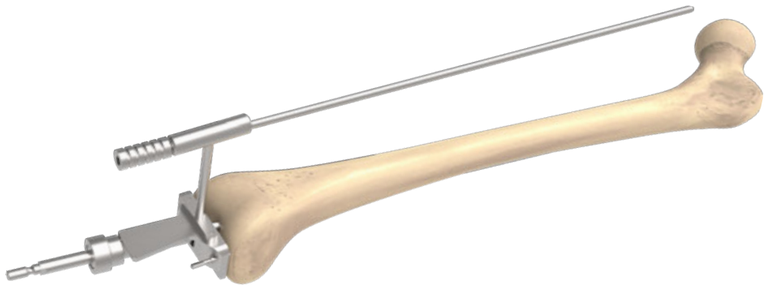

Instruments

Femoral IM Alignment Guide

Extramedullary Alignment tower

Alignment Rod

Quick Pin Driver

Threaded Pin
30 mm / 50 mm

A. Distal Femoral Resection

Distal Femoral Resection

Attach the **Distal Femoral Cutting Guide** to the **Distal Femoral Alignment Guide**. Drill pilot holes through the "0" pin holes on the anterior surface of the **Distal Femoral cutting Guide** and insert a pair of **Round Pins** to secure the cutting guide.

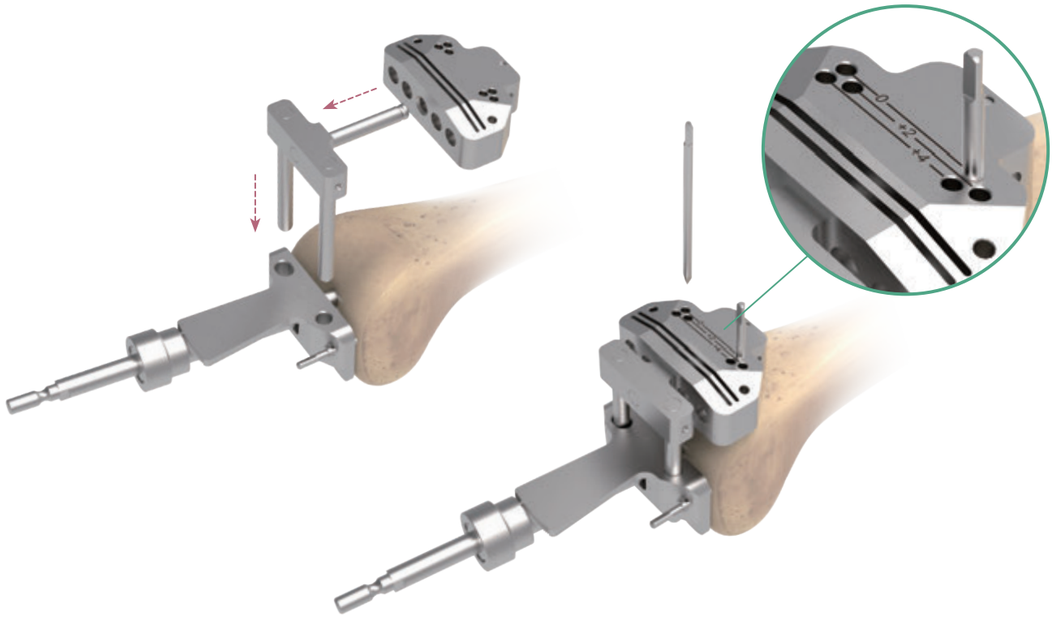

Note:

The U2 Knee technique is designed for a standard 9 mm distal femoral resection when the **Distal Femoral Cutting Guide** is set to the "0" pin hole position. The femoral component has a 9 mm distal femoral implant thickness.

If a different distal femoral resection level is required:
The +2 mm or-2 mm holes may be utilized by shifting the **Distal Femoral Cutting Guide**. Alternatively, the +3 mm cutting slot may be used.

Instruments

Distal Femoral Alignment Guide

Distal Femoral Cutting Guide

Round Pin

Quick Pin Driver

Femoral IM Alignment Guide

A. Distal Femoral Resection

Before performing the distal femur resection, additional **Threaded Pins** may be placed to further secure the resection guide. Then, use a standard .050" (1.27 mm) saw blade through the cutting slot to resect the distal femur.

Optional tip for +1/-1 mm bone resection:
The +3 mm cutting slot may be utilized by combining and shifting the **Distal Femoral Cutting Guide** to the adjacent +2 mm or -2 mm holes to create +1- or-1 mm bone resection.
For example: use the +2 mm holes for initial fixation, then shift the **Distal Femoral Cutting Guide** to the 0 mm holes and use +3 mm cutting slot to allow an +1 mm bone cut (bone cut from standard 9 mm to become 10 mm)

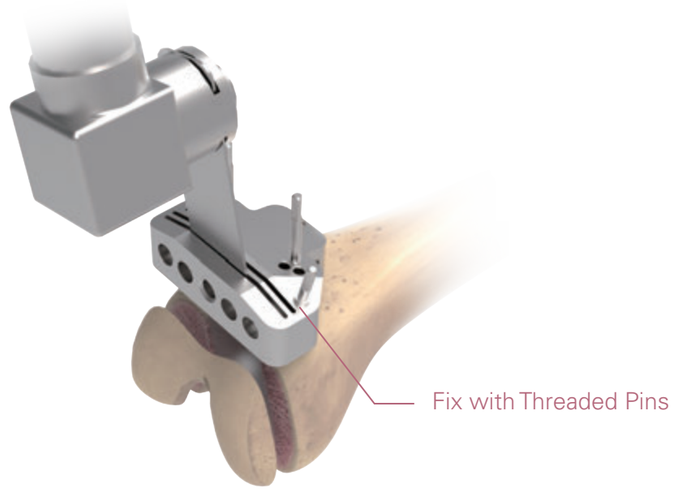

Instruments

Distal Femoral Cutting Guide

Threaded Pin

Quick Pin Driver

B. Proximal Tibial Resection

There are two options for preparing tibial platforms. One is using intramedullary alignment, and the other is using extramedullary alignment.

Tibial Intramedullary Alignment Method Access Canal

Flex the knee joint to the maximum angle and expose the whole tibial plateau by moving it anteriorly. Use the **Step Drill** to create an opening into the tibial canal. Insert the drill to a depth of approximately 100 mm into the tibial canal.

After taking out the drill, it is recommended to apply an **Alignment Rod** into the intramedullary canal cavity several times to reduce the risk of fat embolism. Connect the **T-Handle** to the **Tibial IM Rod** and insert the assembly manually into tibial canal through the narrowest point inside. Then, remove the **T-Handle**. If it is difficult to insert or align the **Tibial IM Rod**, enlarge the pilot hole with the **Step Drill** again.

Instruments

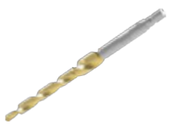

Step Drill

Tibial IM Rod

Alignment Rod

T-Handle

B. Proximal Tibial Resection

Tibial Cutting Jig Positioning and Tibial Resection

Position the **Tibial Cutting Jig** onto the **Tibial IM Alignment Guide**.

With the thumb screw held loosely, the **Tibial Stylus** may be used to establish the appropriate height position of the **Tibial Cutting Jig**.

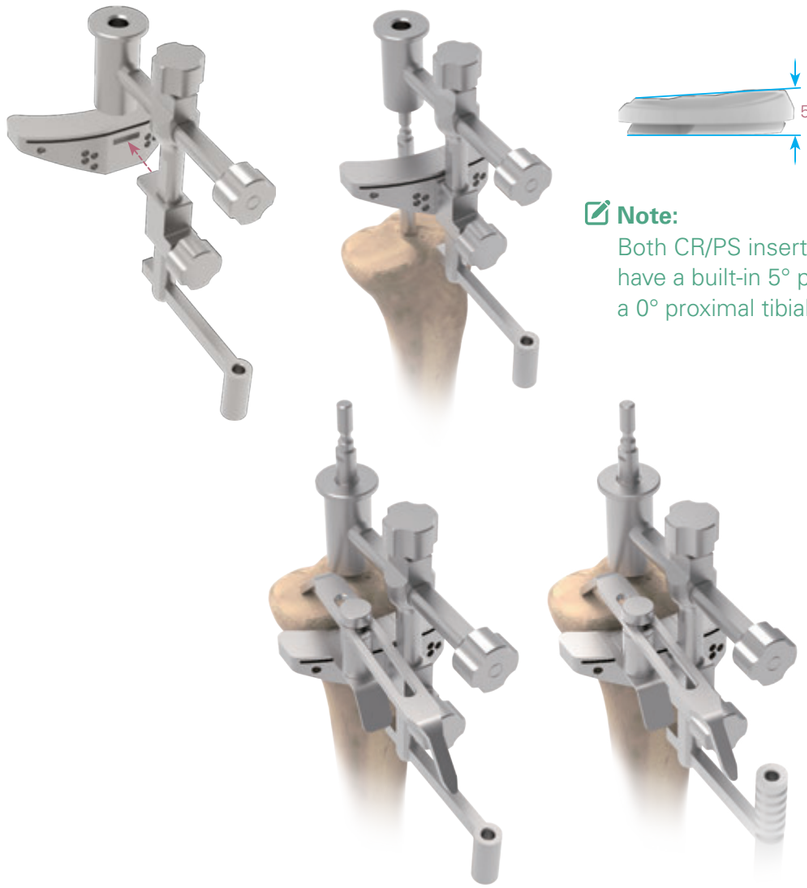

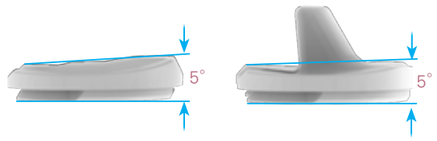

Note:
Both CR/PS inserts in U2 Knee System have a built-in 5° posterior slope, therefore, a 0° proximal tibial cut is recommended.

Instruments

Tibial IM Alignment Guide

Tibial Cutting Jig

Tibial Stylus

Alignment Rod

B. Proximal Tibial Resection

To determine the desired tibial resection level, insert the **Tibial Stylus** into the cutting slot and position the tip of the stylus onto the appropriate location on the tibial plateau.

The **Tibial Stylus** allows two options to position the cutting guide at either 2 mm or 9 mm resection levels.

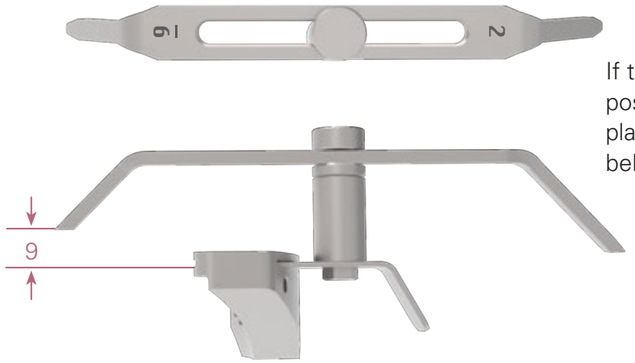

If the **Tibial Stylus** tip marked 9 mm is positioned on the high point of the tibial plateau, the bone resection will be 9 mm below the contact point of the stylus tip.

If the **Tibial Stylus** tip marked 2 mm is positioned on the low point of the tibial plateau, the bone resection will be 2 mm below the contact point of the stylus tip.

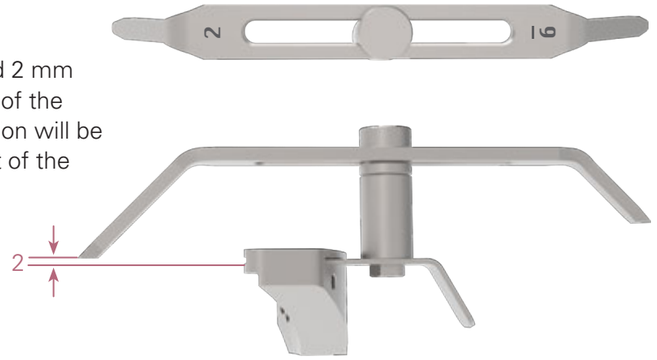

Instruments

Tibial Stylus

B. Proximal Tibial Resection

With the **Tibial Cutting Jig** in the correct position, place two **Round Pins** into the "0" hole locations. Additional **Round Pins** may be used in the peripheral holes provided for additional stability.

With the **Tibial Cutting Jig** secured, re-assemble the **T-Handle** onto the **Tibial IM Rod** then remove the **Tibial IM Rod** and **Tibial IM Alignment Guide** leaving the **Tibial Cutting Jig** in position.

The proximal tibial resection may be performed utilizing a 1.27 mm saw blade. Once completed, the **Tibial Cutting Jig** and drills may be removed for subsequent trial reduction.

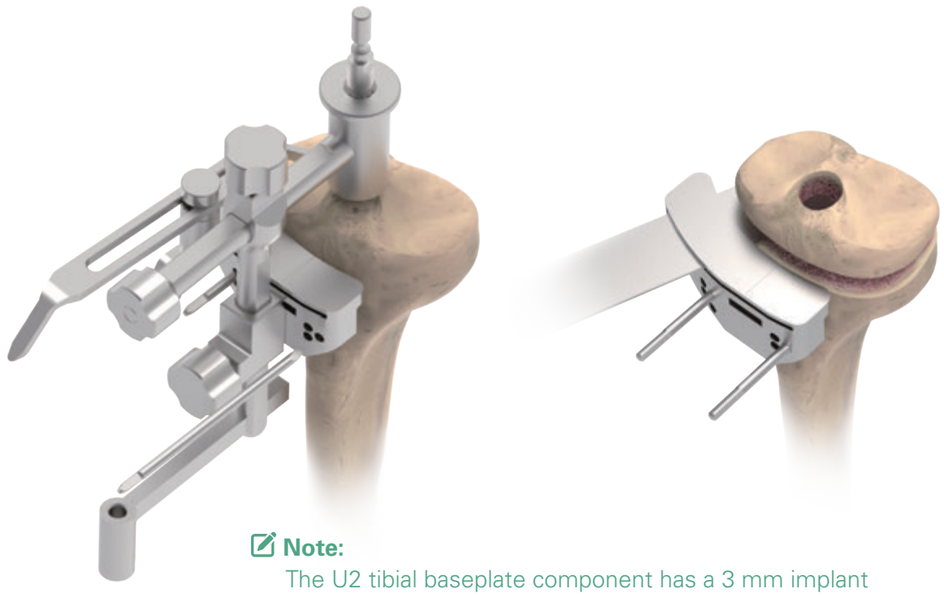

Note:
The U2 tibial baseplate component has a 3 mm implant thickness. The tibial insert options include this thickness in their naming convention. For example, the 9 mm tibial insert is a 6 mm polyethylene insert thickness + 3 mm tibial baseplate thickness. Prior to resection, if the surgeon wishes to increase or decrease the tibial resection thickness, the "+2" or "-2" hole locations may be utilized to re-position the **Tibial Cutting Jig**.

Instruments

Tibial IM Alignment Guide

Tibial Cutting Jig

Tibial Stylus

Round Pin

B. Proximal Tibial Resection

Tibial Extramedullary Alignment Method

Attach the selected **Tibial Cutting Jig** to the **Tibial EM Alignment Guide**.

With the knee fully flexed, position the distal portion of the **Tibial EM Alignment Guide** around the ankle joint, proximal to the malleoli. Position the EM Alignment Guide rod is parallel to the anterior of the tibia from the sagittal, i.e. side, position so the proximal tibial resection will be made at 0° slope.

Position the proximal portion of the **Tibial EM Alignment Guide** by impacting the spikes of the **Tibial EM Alignment Guide** into the central portion of the proximal tibial plateau.

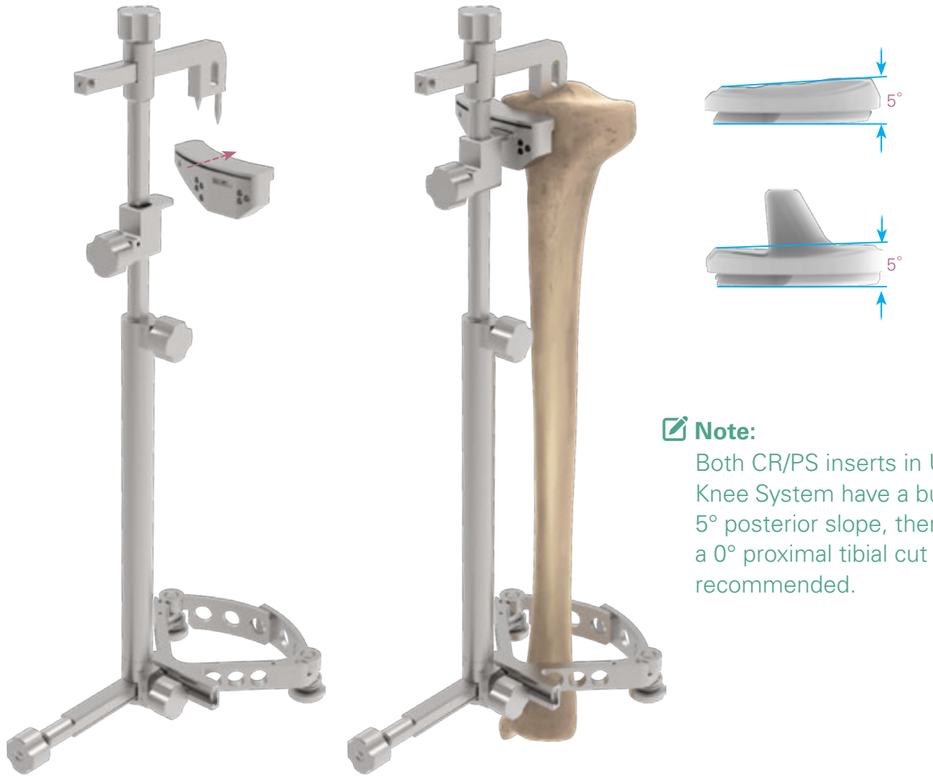

Note:
Both CR/PS inserts in U2 Knee System have a built-in 5° posterior slope, therefore, a 0° proximal tibial cut is recommended.

Instruments

Tibial EM Alignment Guide

Tibial Cutting Jig

B. Proximal Tibial Resection

The resection thickness may be determined by inserting the **Tibial Stylus** in the resection slot.

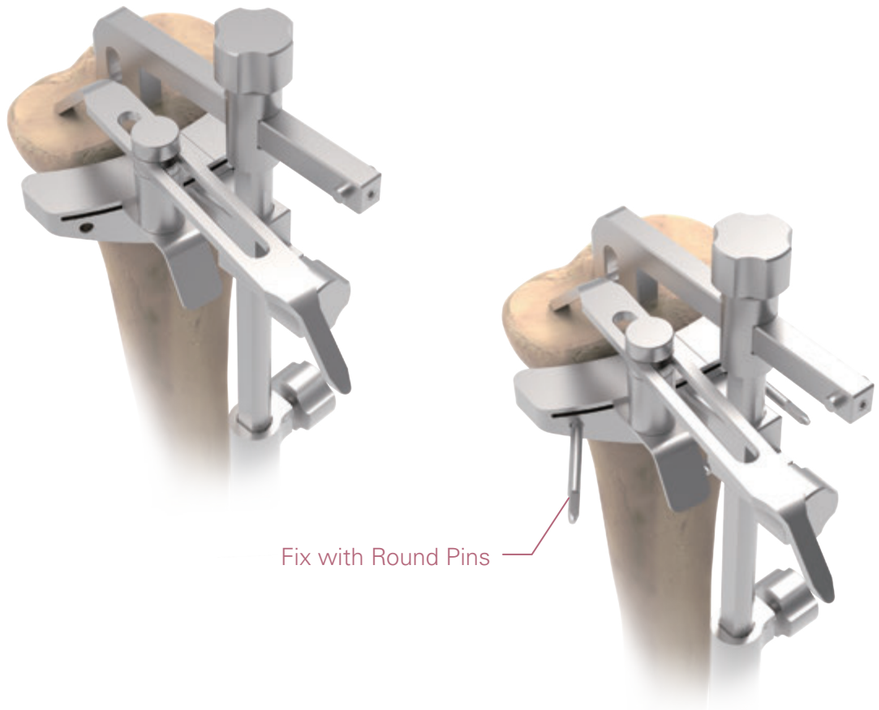

Instruments

Tibial Stylus

Round Pin

Tibial Cutting Jig

B. Proximal Tibial Resection

To determine the desired tibial resection level, insert the **Tibial Stylus** into the cutting slot and position the tip of the stylus onto the appropriate location on the tibial plateau.

The **Tibial Stylus** allows two options to position the cutting guide: 2 mm or 9 mm cutting levels.

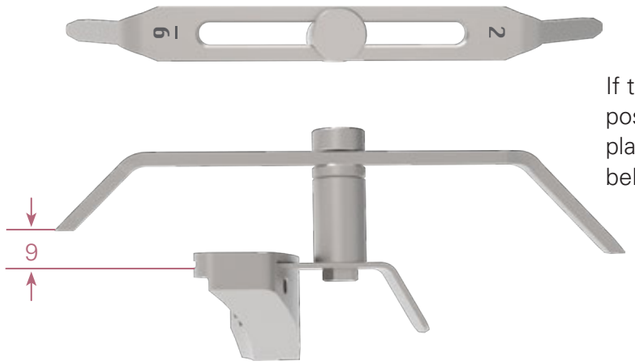

If the **Tibial Stylus** tip marked 9 mm is positioned on the high point of the tibial plateau, the bone resection will be 9 mm below the contact point of the stylus tip.

If the **Tibial Stylus** tip marked 2 mm is positioned on the low point of the tibial plateau, the bone resection will be 2 mm below the contact point of the stylus tip.

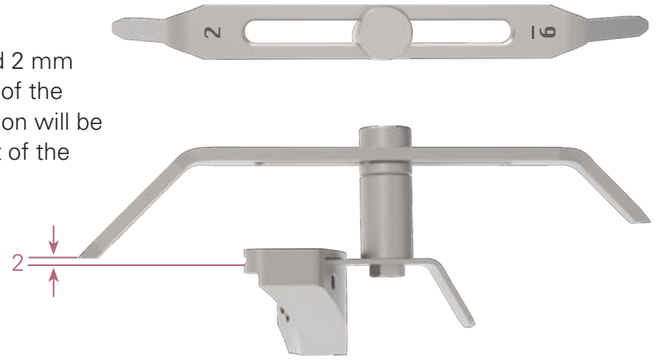

Instruments

Tibial Stylus

B. Proximal Tibial Resection

After the **Tibial Cutting Jig** is securely positioned, remove the **Tibial EM Alignment Guide** by utilizing the **Spike and Tibial EM Guide Extractor**.

Use the **EM Alignment Guide** and **Alignment Rod** to recheck the alignment if necessary.

The proximal tibial resection may be performed utilizing a 1.27 mm saw blade. Once completed, the **Tibial Cutting Jig** and drills may be removed for subsequent trial reduction.

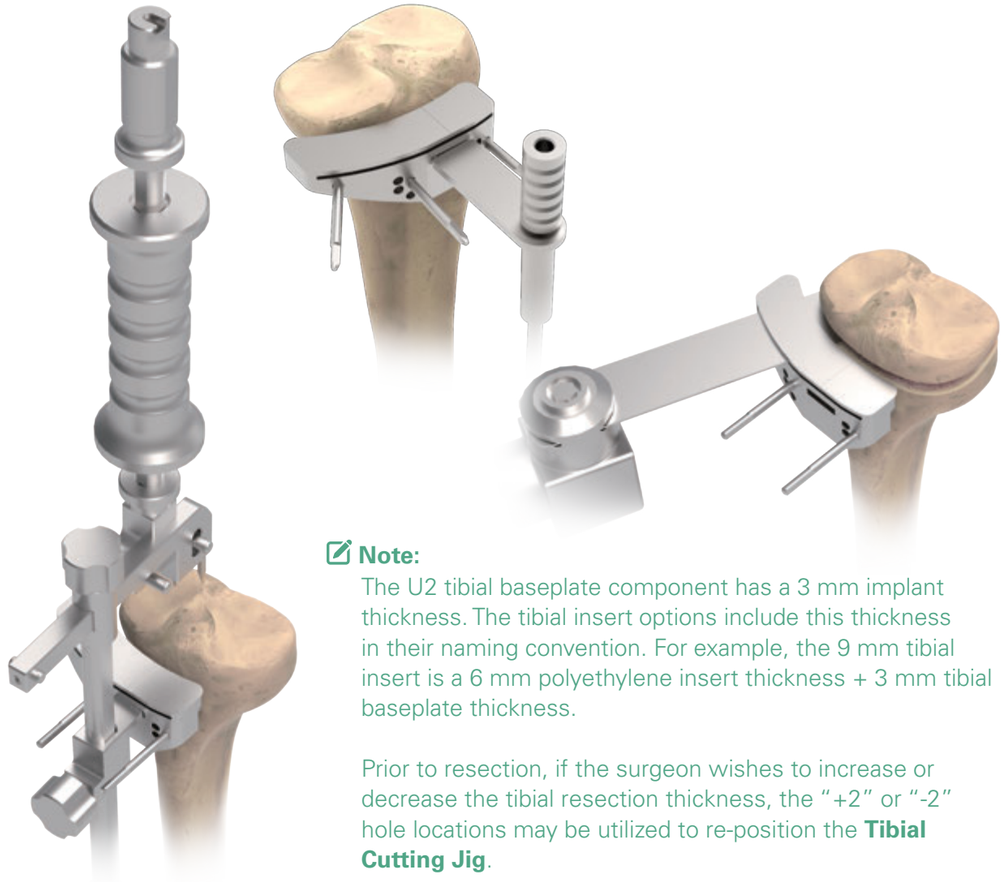

Note:
The U2 tibial baseplate component has a 3 mm implant thickness. The tibial insert options include this thickness in their naming convention. For example, the 9 mm tibial insert is a 6 mm polyethylene insert thickness + 3 mm tibial baseplate thickness.

Prior to resection, if the surgeon wishes to increase or decrease the tibial resection thickness, the "+2" or "-2" hole locations may be utilized to re-position the **Tibial Cutting Jig**.

Instruments

Tibial EM Alignment Guide

Tibial Cutting Jig

Spike and Tibial EM Guide Extractor

EM Alignment Guide

Alignment Rod

C. Extension Gap Assessment

Remove any osteophytes, meniscus or other soft tissue as needed to properly complete assessment.

Extend the knee and insert the appropriate end of the **Gap Gauge** to verify the extension gap of the knee. The **Alignment Rod** may be utilized to evaluate bone resection.

18 mm = 9 mm **Tibial Insert** thickness
+ 9 mm **Femoral Component** thickness

Instruments

Gap Gauge

Alignment Rod

D. Femoral Sizing and Chamfer Resection

Place the **Femoral Sizer** against the resected distal surface of the femur with the feet seated on the posterior condyles. Position the stylus tip to contact the lowest point of the anterior femoral cortex. The femoral component size can now be read from the main panel. Select the optimal size.

There are two options for setting external rotation.
To establish 3° external rotation, create fixation pin holes with **3.2 mm Twist Drills** through the holes that correspond to the affected knee (left or right) on the front of the **Femoral Sizer**.
To establish 0° neutral rotation, create fixation pin holes with **3.2 mm Twist Drills** through the holes labelled "0" on the front of the **Femoral Sizer**.

Note:
The U2 Knee primary system is an anterior reference system. If the indicated size on the face of the guide is between two sizes, it is generally preferred to choose the smaller one.

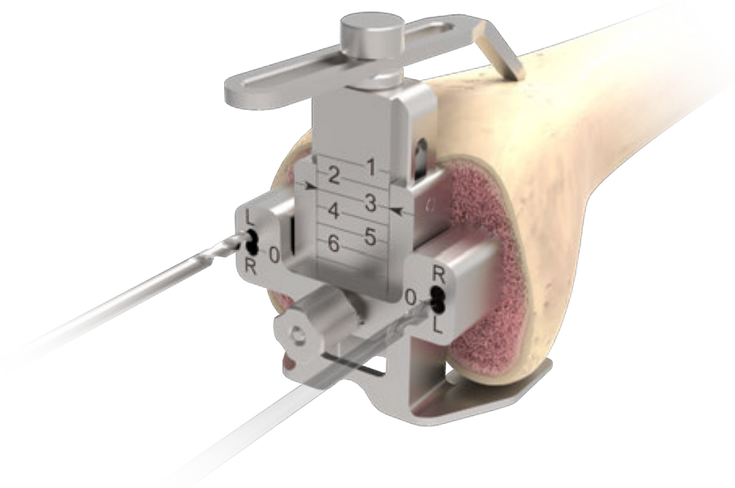

3° External rotation

Left / Right

No rotation

Instruments

Femoral Sizer Anterior Ref

D. Femoral Sizing and Chamfer Resection

Select the **Femoral A/P Chamfer Cutting Guide** that corresponds to the selected size and secure to the resected distal femoral surface using the predrilled fixation pin holes (Note: it must be placed flush against the resected distal femur).

Use the **Spike or Femoral A/P Chamfer Guide Handle** to enhance the stability of the cutting guide during resection and check resection thickness with the **Resection Check Blade**. Proceed with the anterior and posterior resections and both chamfer resections with a 1.27 mm saw blade. Remove the **Femoral A/P Chamfer Cutting Guide**.

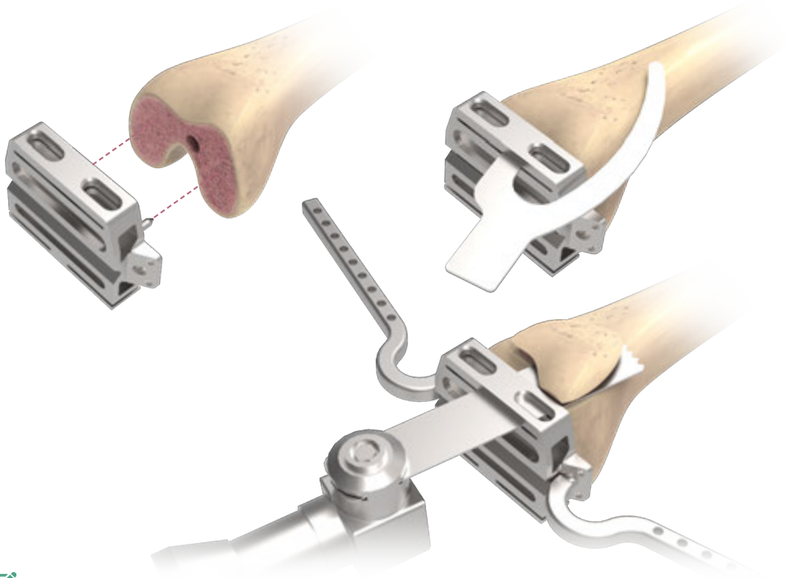

Note:
The U2 Knee femoral component has an anterior flange angle set at 5° vs. the distal femoral surface.

The U2 Knee technique is designed for a standard 9 mm posterior condylar resection. The femoral component has a 9 mm posterior implant thickness.

Instruments

Femoral A/P Chamfer Cutting Guide

Femoral A/P Chamfer Guide Handle

Resection Check Blade

E. Extension and Flexion Gaps Confirmation

The extension and flexion joint gaps may be evaluated with the **Gap Gauge**. Select the 9 mm **Gap Gauge** initially to assess both the extension and flexion joint gaps. If a thicker gap is required, combine additional **Gap Gauge Blocks** with different thicknesses and test again. The range of thickness is from 9 mm to 18 mm. If the assessed femoral and extension gaps are optimal, insert the femoral and tibial trials to test overall knee mobility and their relative implant position.

Note:
The **Alignment Rod** may be inserted through the Gap Gauge handle to assess the extramedullary alignment in both extension and flexion.

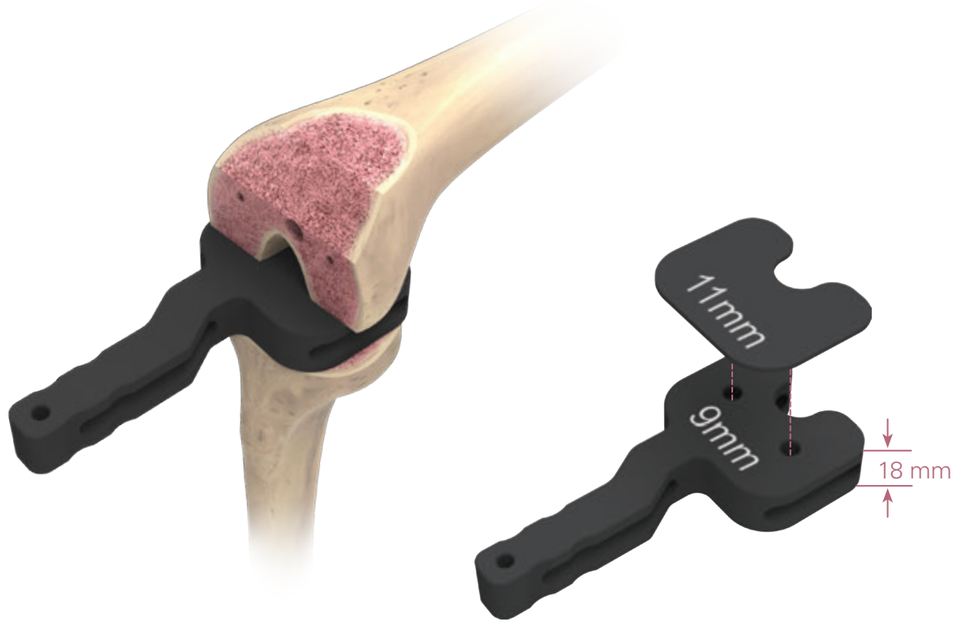

18 mm = 9 mm **Tibial Insert** thickness
+ 9 mm **Femoral Component** thickness

Instruments

Gap Gauge

Alignment Rod

F. Trial Reduction

Initial Femoral Trial Insertion

Assemble the selected size of **CR Femoral Trial** to the **Femoral Driver**.
Introduce the femoral trial onto the prepared femur until its sitting 2-3 mm above the resected femoral surface.
Strike the **CR Femoral Trial** onto the resected femur with the **Femoral Impactor**.

Caution:
Femoral Driver is designed to position the implant and trial, not for final impaction. **Please impact gently**.

Instruments

CR Femoral Trial

Femoral Driver

Femoral Impactor

F. Trial Reduction

Tibial Baseplate Sizing

As the U2 Knee system allows interchangeability of femoral and tibial implant sizes, attach the **Tibial Baseplate Trial Handle** to the **Tibial Baseplate Trial** that best provides maximum coverage of the proximal tibia.

Once selected, remove the **Tibial Baseplate Trial Handle** and insert a **CR Tibial Insert Trial** of desired thickness with **Tibial Insert Trial Handle**.

The **Alignment Rod** may be inserted into the **Tibial Insert Trial Handle** to re-check the alignment.

Instruments

Tibial Baseplate Trial

Tibial Baseplate Trial Handle

Tibial Insert Trial, CR C/N varies by size

Tibial Insert Trial Handle

G.CR Pegs Preparation

Drill the fixation peg holes on the **CR Femoral Trial** with the **Femoral Condyle Drill**.

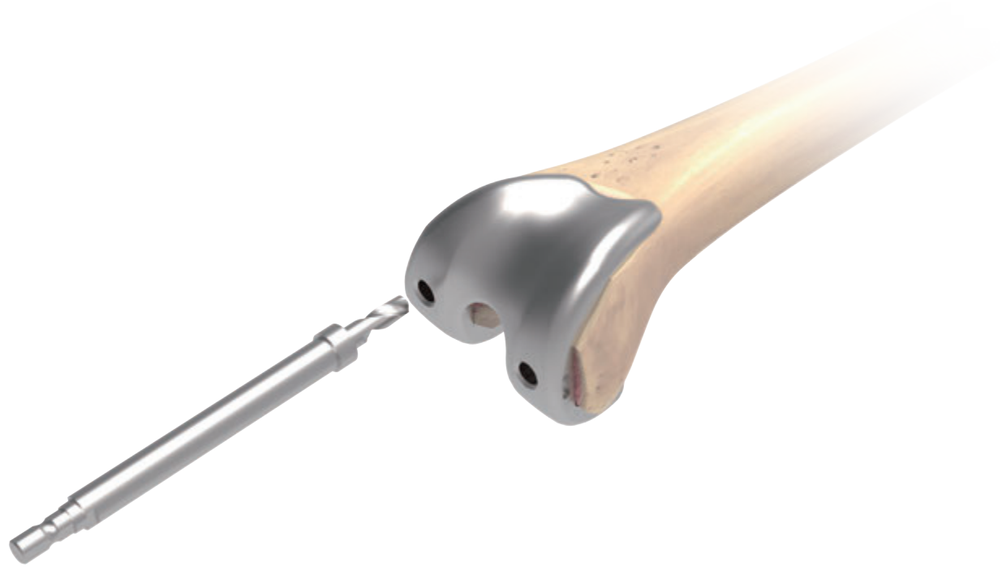

Instruments

CR Femoral Trial

Femoral Condyle Drill

H.PS Box Preparation

Position the PS Notch Cutting Jig

With the reusable **CR Femoral Trial** in place, insert the **PS Cutting Jig Drill Guide** onto one fixation peg hole. Drill a pilot hole with **3.2 mm Drill** through the pin hole on the drill guide and place a **Round Pin** through the drill guide to further position the **PS Notch Cutting Jig**. Remove the **CR Femoral Trial** and secure the **PS Notch Cutting Jig** with **Threaded Pins**. The M/L width of **PS Notch Cutting Jig** is the same as the M/L width of the implant.

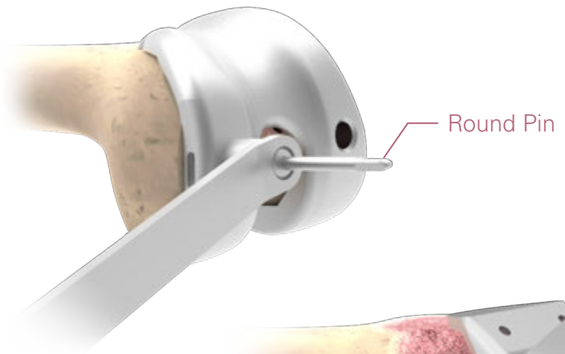

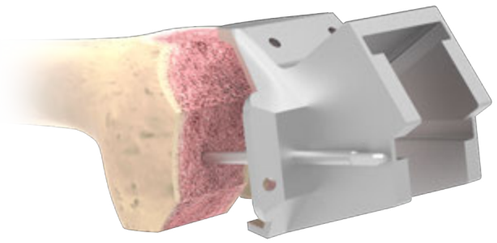

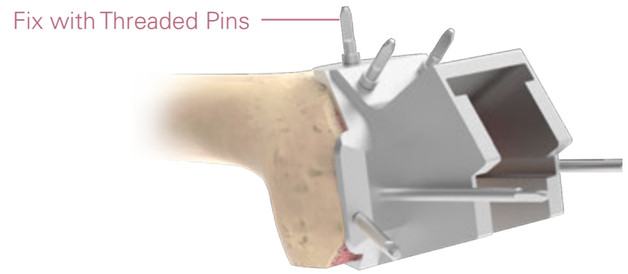

Instruments

CR Femoral Trial

PS Cutting Jig Drill Guide

3.2 mm Drill

Round Pin

PS Notch Cutting Jig

Threaded Pin
30 mm / 50 mm

H.PS Box Preparation

Prepare PS Box

Attach the **PS Reamer** to a drill and insert into the anterior guide slot on the **PS Notch Cutting Jig**. Ream until fully engaged with the stopping point. Repeat for the posterior guide slot.

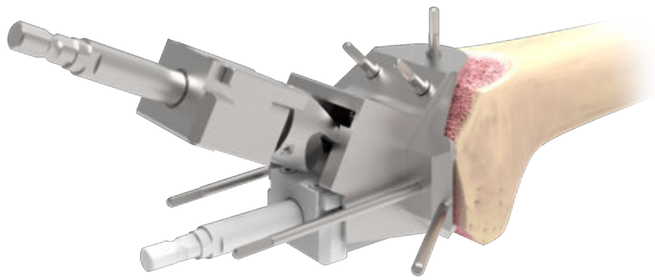

Advance the **PS Housing Punch** into the anterior guide slot to remove any remaining bone or tissue. Repeat for the posterior guide slot.

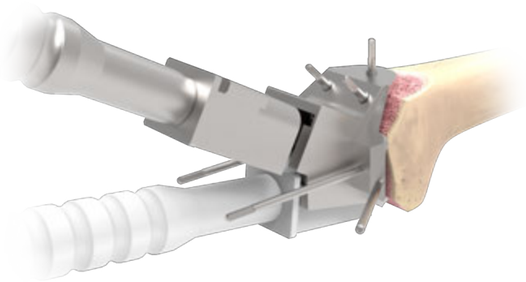

Advance the **PS Housing Impactor** into the anterior guide slot until fully engaged with the stopping mechanism to verify all bone and tissue is removed. Repeat for the posterior guide slot.

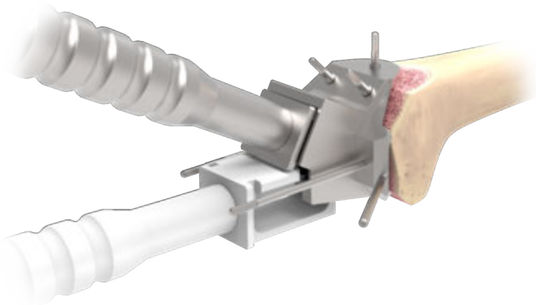

Instruments

PS Notch Cutting Jig

PS Reamer

PS Housing Punch

PS Housing Impactor

H.PS Box Preparation

Trial Reduction

Replace the **PS Notch Cutting Jig** and pins with **PS Femoral Trial**.

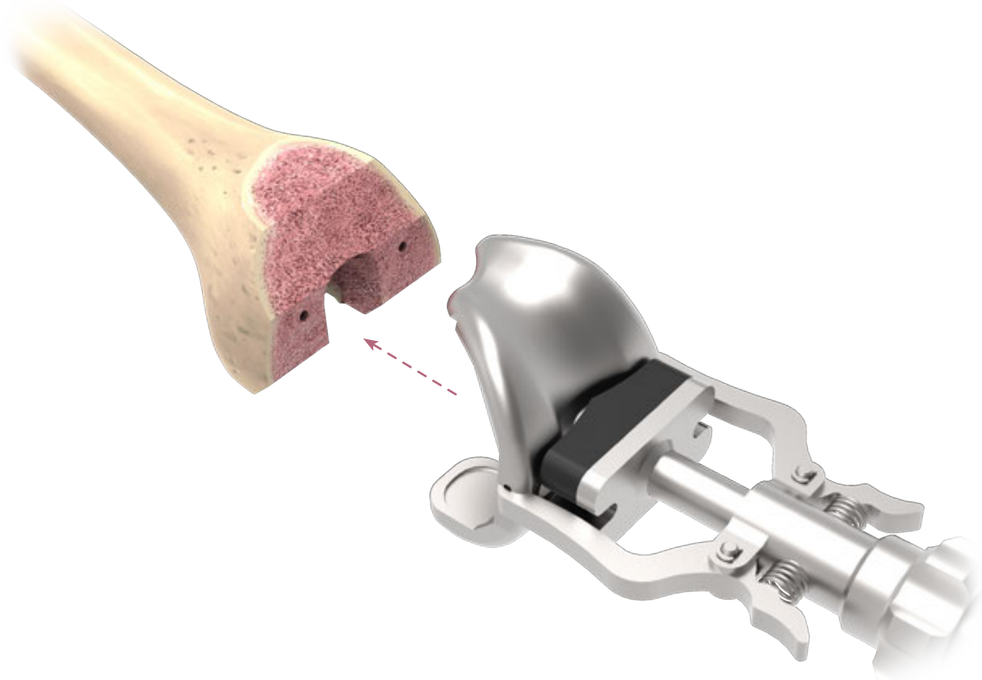

Instruments

PS Femoral Trial

Femoral Driver

I. Proximal Tibial Preparation

Secure the **Tibial Baseplate Trial** on the tibia with two **Head Pins**. Attach the **Tibial Drill Guide** to it and drill an opening with the **Tibial Boss Drill** until fully seated on the **Tibial Drill Guide**. Then, remove the **Tibial Drill Guide** and **Tibial Boss Drill**.

If the extension stem is needed, please refer to the Appendix.

Instruments

Tibial Baseplate Trial

Tibial Drill Guide

Tibial Drill

Head Pin

I. Proximal Tibial Preparation

Choose the **Cemented Tibial Punch** or **Cementless Tibial Punch** that corresponds to the selected **Tibial Baseplate** size and attach it to the **Tibial Punch Handle, CM**.

Cemented Tibial Punch

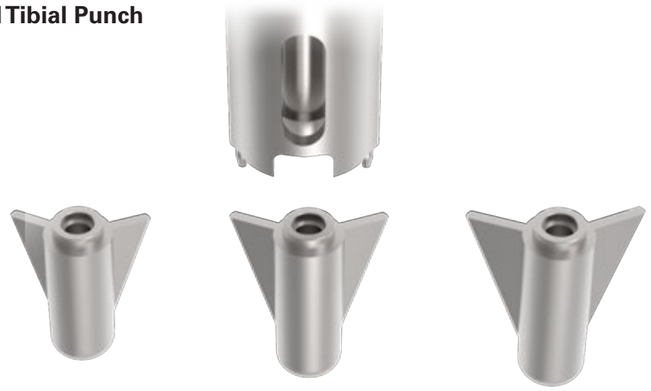

Size #1~#2 Size #3~#4 Size #5~#6

Cementless Tibial Punch

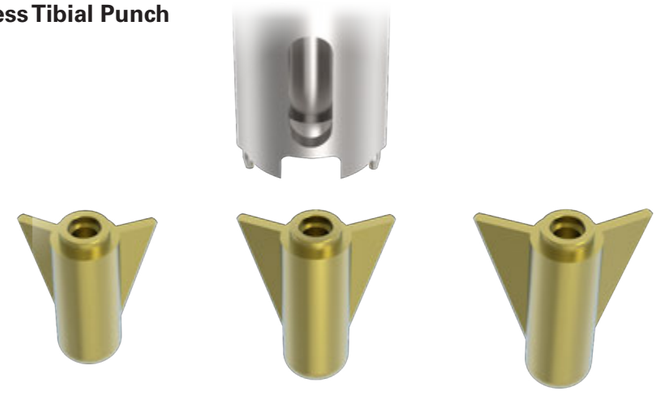

Size #1~#2 Size #3~#4 Size #5~#6

Instruments

Tibial Punch Handle, CM

Cemented Tibial Punch

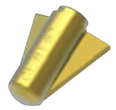

Cementless Tibial Punch

I. Proximal Tibial Preparation

Insert the **Tibial Punch** into the guide hole on the **Tibial Baseplate Trial** and tap with the **Hammer** precisely and vertically into the tibial canal until fully seated on the **Tibial Baseplate Trial**.

Instruments

Tibial Punch Handle, CM

Cemented Tibial Punch

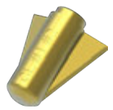

Cementless Tibial Punch

Tibial Baseplate Trial

J. Onset Patellar Preparation

Patella Sizing and Bone Resection

When the onset patellar component is chosen, assemble the **Onset Patellar Resection Guide** to the **Patellar Resection Clamp**.

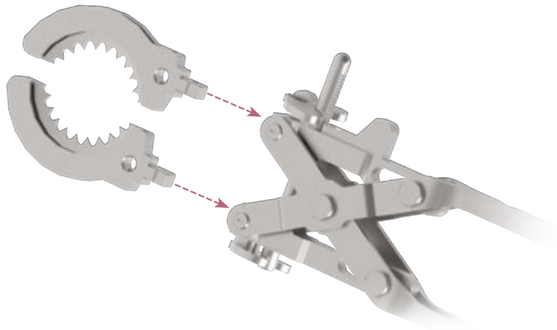

Use the stylus on the bottom of **Onset Patellar Resection Guide** to check if the remained patellar thickness exceeds 10 mm.

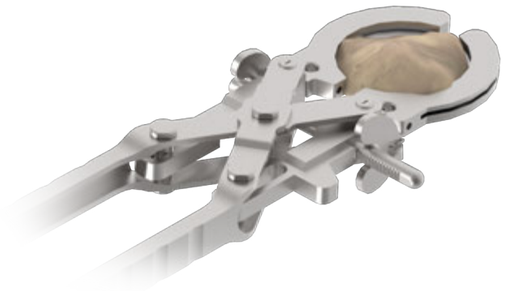

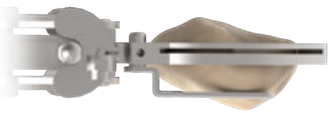

Onset Patellar Component

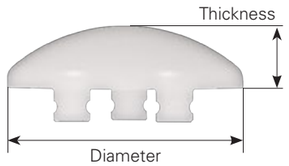

Size	XS	S	M	L	XL	XXL	EL
Thickness	7	8	8.5	9	9.5	10	10.5
Diameter	26	29	32	35	38	41	44

Unit : mm

Instruments

Patellar Resection Clamp

Onset Patellar Resection Guide

J. Onset Patellar Preparation

Clamp the patella tight and place the saw blade into the slot of the clamp and resect the patella until the showing subchondral bone.

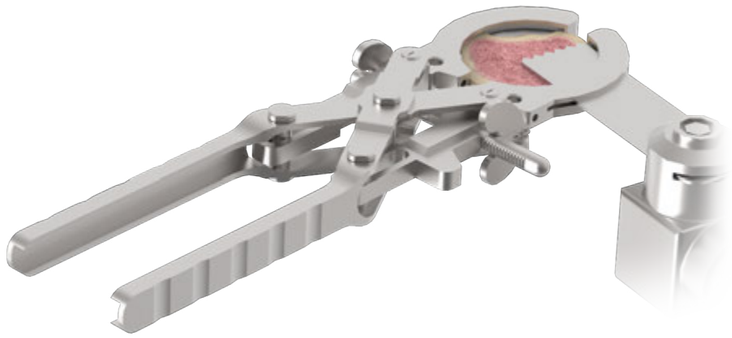

Then choose the appropriate size **Onset Patellar Drill Guide**, and drill three peg holes with the **Onset Patellar Peg Drill** completing the onset patellar preparation.

Place the **Onset Patellar Trial** in place and confirm the restored patellar AP thickness.

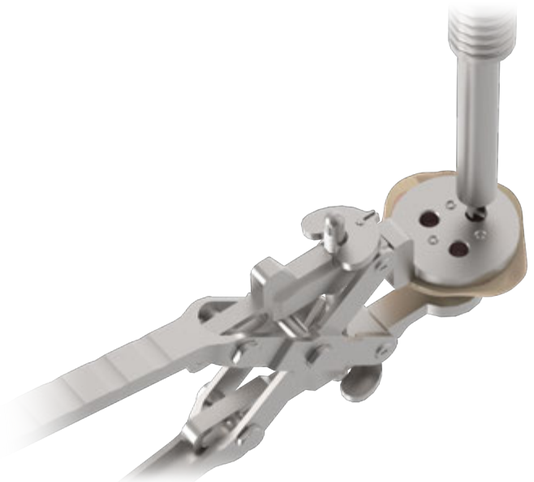

Instruments

Patellar Resection Clamp

Onset Patellar Resection Guide

Onset Patellar Drill Guide

Onset Patellar Peg Drill

Onset Patellar Trial

K. Inset Patellar Preparation

Patella Sizing and Bone Resection

Place the knee in full extension and evert the patella with caution.
Remove the excessive cartilage and osteophytes adjacent to the border of patella.
Use the **Caliper** to measure the anterior-posterior dimension of the patella.

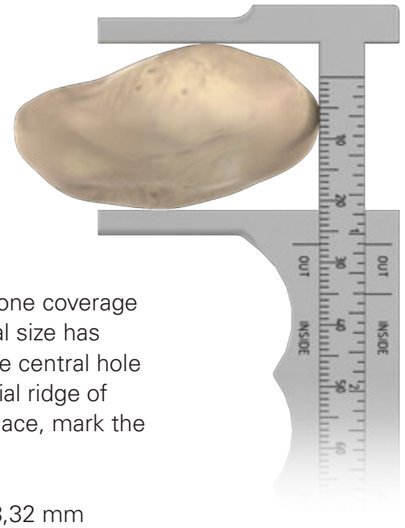

Use the **Patellar Sizing Rings** to evaluate bone coverage and select the optimal size. Once the optimal size has been selected, set positioning by locating the central hole of the sizing ring with the center of the medial ridge of the patella. While holding the sizing ring in place, mark the outer border of the selected sizing ring.

Inset Patellar Sizing Ring Diameter: 22,25,28,32 mm

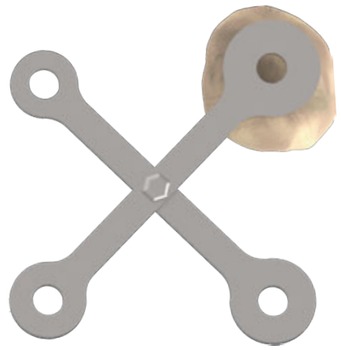

Surgical Tip:
It is suggested to leave at least 2 mm from the ring to the border of the patella.

Instruments

Caliper

Patellar Sizing Ring

K. Inset Patellar Preparation

Inset Patellar Reaming Depth and Pilot Hole

Attach the appropriate size of **Patellar Clamp Ring** to the **Patellar Resection Clamp**.

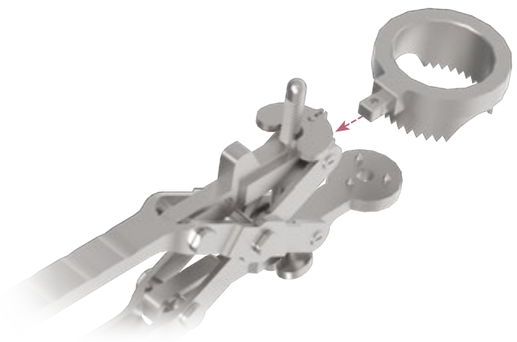

Align the **Patellar Clamp Ring** on the patella clamp to the previously marked position and secure to the patella by depressing the handles on the clamp. Choose the **Patellar Drill Depth Sleeve** that corresponds to the selected patella size and place over the clamp ring. Insert the **Patella Reamer** into the Patella ring until it's tip is touching the patella.

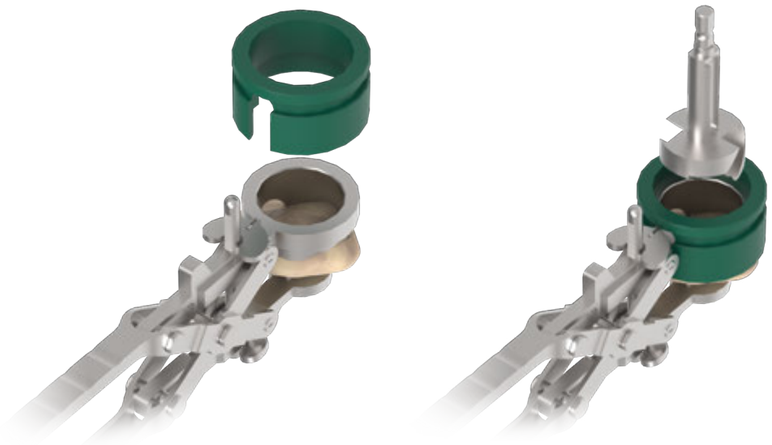

Instruments

Patellar Clamp Ring

Patellar Resection Clamp

Patellar Drill Depth Sleeve

Patellar Reamer

K. Inset Patellar Preparation

Use the **Screwdriver, Hex 5** to assemble the **Patellar Reamer Stopper** onto the **Patellar Reamer** with the stopper seated on the depth sleeve. This will ensure the drill depth of the reamer equals the patellar component thickness.

Note:
If the thickness of patella is smaller than 20 mm, it will be necessary to adjust the stopper manually to the desired drill depth to retain at least 8 mm patellar thickness.

Remove the **Patellar Depth Sleeve** and the **Patella Reamer**, leaving the Patellar Reamer Stopper attached to the reamer.

Insert the **Patellar Drill Guide** that corresponds to the selected **Patellar Clamp Ring**. Advance the **Patellar Drill** (Diameter 9.45 mm) and create a pilot hole for the **Patellar Reamer**.

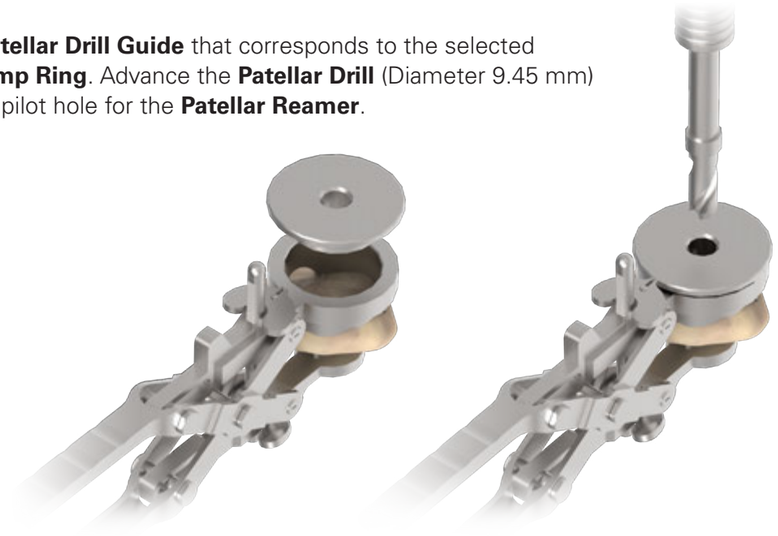

Instruments

Patellar Reamer Stopper

Screwdriver, Hex 5

Patellar Drill Guide

Patellar Drill

K. Inset Patellar Preparation

Re-insert the **Patellar Reamer** into the **Patellar Clamp Ring** and ream out the proper depth of bone to create the inset bone bed.

Note :
A minimum bone thickness of 10mm should be maintained. For thinner patella, the position of the **Patellar Reamer Stopper** on **Patella Reamer** may need to be manually adjusted to ensure sufficient bone bed thickness.

Inset Patellar Component

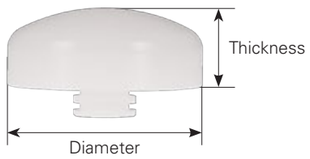

Size	S	M	L	XL
Thickness	8	10	10	10
Diameter	22	25	28	32

Unit : mm

Then, Place the **Inset Patellar Trial** in place and confirm the restored patellar AP thickness.

Instruments

Patellar Clamp Ring

Patellar Reamer Stopper

Patellar Reamer

Patellar Resection Clamp

Inset Patellar Trial

L. Implantation

Final Trial Reduction

Affix the **Patellar Trial**, **Femoral Trial**, **Tibial Baseplate Trial**, and **Tibial Insert Trial** to the corresponding resected bony surfaces. Test for joint laxity and range of motion. Observe how the muscles and ligaments react in extension and flexion. Manage the soft tissue tension to ensure ideal joint stability and mobility. Remove all trials and clean the resected bone surfaces.

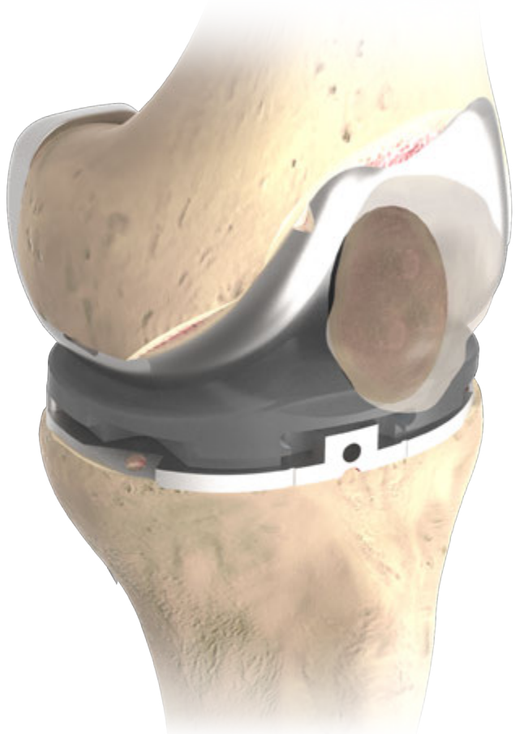

Instruments

CR Femoral Trial

PS Femoral Trial

CR Insert Trial

PS Insert Trial

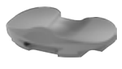
UC Insert Trial

Tibial Baseplate Trial

Inset Patellar Trial

Onset Patellar Trial

L. Implantation

Femoral Component Implantation

Mix and prepare bone cement in the usual fashion for the femoral component and femoral bone surface. Attach the femoral component to the **Femoral Driver** and press against the prepared femoral bone surface until the component is flush with the bone.

Strike the **Femoral Impactor** to firmly seat the femoral component in place against the femoral bone surface. Use an instrument such as a curette to remove any excess, extruded cement.

Caution:
The Femoral Driver is designed to position the implant and trial, not for final impaction. Please **impact gently** to avoid instrument breakage.

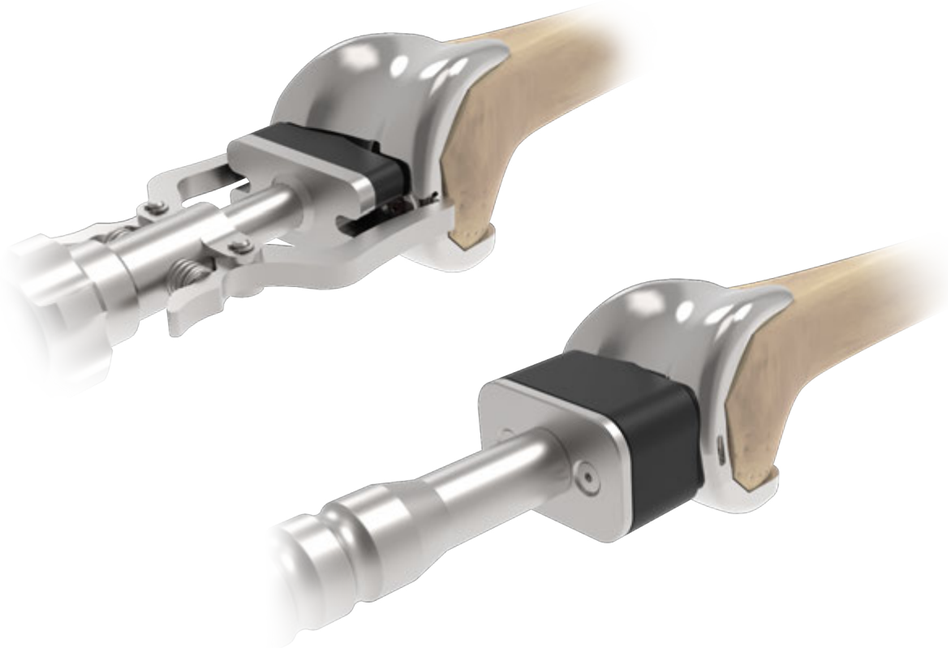

Instruments

Femoral Driver

Femoral Impactor

L. Implantation

Tibial Baseplate Component Implantation

Mix and prepare bone cement in the usual fashion for the tibial component and tibial bone surface.

Manually insert the tibial component into position on the prepared tibial surface.

Strike the **Tibial Baseplate Impactor** to firmly seat the tibial component to firmly seat it in place against the tibial bone surface.

Use an instrument such as a curette to remove any excess, extruded cement.

Instruments

Tibial Baseplate Impactor

L. Implantation

Patellar Component Implantation

Mix and prepare bone cement in the usual fashion for the patella component and patella bone surface.

Manually insert the patella component into position on the prepared patella surface.

Attach the **Patella Cement Clamp Adapter** to the **Patella Clamp** and depress the clamp to firmly seat the patella component in place against the patellar bone surface. Leave the clamp in place until the cement is set.

Use an instrument such as a curette to remove any excess, extruded cement.

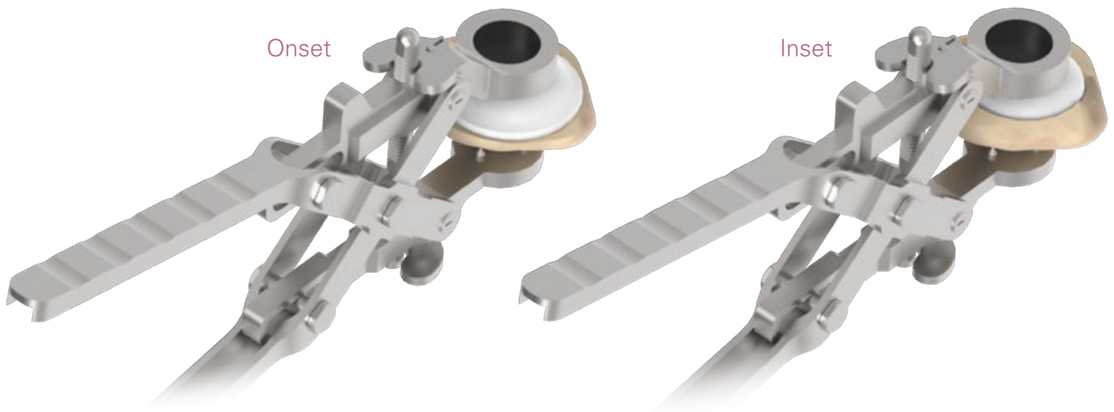

Instruments

Patellar Resection Clamp

Patella Cement Clamp Adapter

L. Implantation

Tibial Insert Implantation

Prior to the insertion of the final Tibial Insert, place the appropriate insert trial onto the baseplate to verify proper insert thickness and joint stability.

It is recommended to initially introduce the final tibial insert by hand onto the Tibial Baseplate. Once the initial engagement of the locking mechanism is verified, use the **Universal Impactor** to fully seat the Insert. All areas of the assembly are then visually assessed for complete seating.

Instruments

Universal Impactor

L. Implantation

APT Component Implantation

Mix and prepare bone cement in the usual fashion for the All Poly Tibial (APT) component and tibial bone surface.

Manually insert the APT component into position on the prepared tibial surface.

Attach the **APT Impactor** to the **Modular Handle** and strike the APT component to firmly seat it in place against the tibial bone surface.

Use an instrument such as a curette to remove any excess, extruded cement.

Instruments

APT Impactor

Modular Handle

Appendix

Preparing Augment and Extension Stem for CMA Baseplate

(with Optional CMA Augment and Extension Stem Tray)

The U2 Knee System incorporates an optional CMA instrument tray to address moderate tibial defects.
Use this Appendix in place of Section H. Proximal Tibial Preparation listed earlier in this guide

Align the **Tibial Baseplate Trial** with resected tibia surface and secure the baseplate trial to the proximal tibia with two **Head Pins** according to the rotational orientation.
Use the **CMA 3.2 mm Drill** to drill carefully through the center tunnel below the **Tibial Baseplate Trial**. Stop drilling when reaching to the marked depth according to desired size of tibial baseplate. A center groove on the proximal tibia plane is formed as a vertical resection reference.

Caution:
Avoid drilling passed the marked depth to avoid soft tissue damage

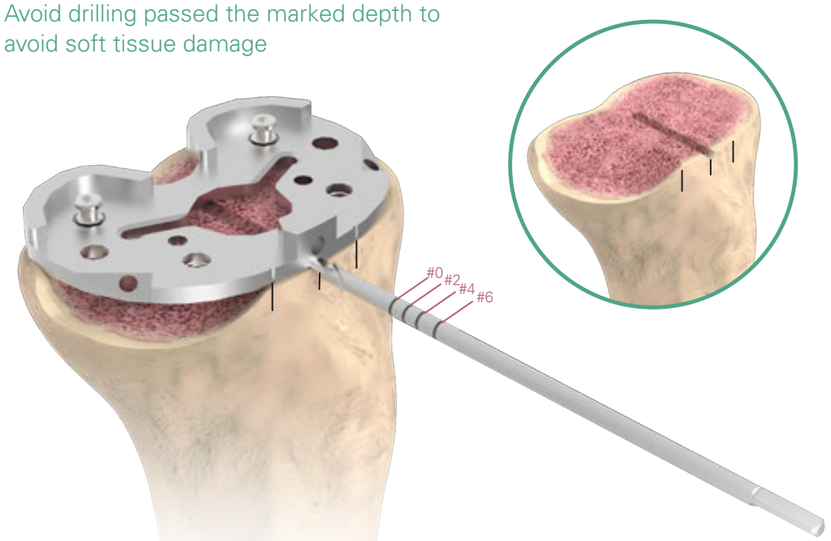

Instruments

Tibial Baseplate Trial

Head Pin

CMA 3.2 mm Drill

Appendix

Assemble the appropriate **Tibial Augment Resection Guide** (left or right) and the **Tibial Augment Resection Guide Adapter** to the baseplate trial.

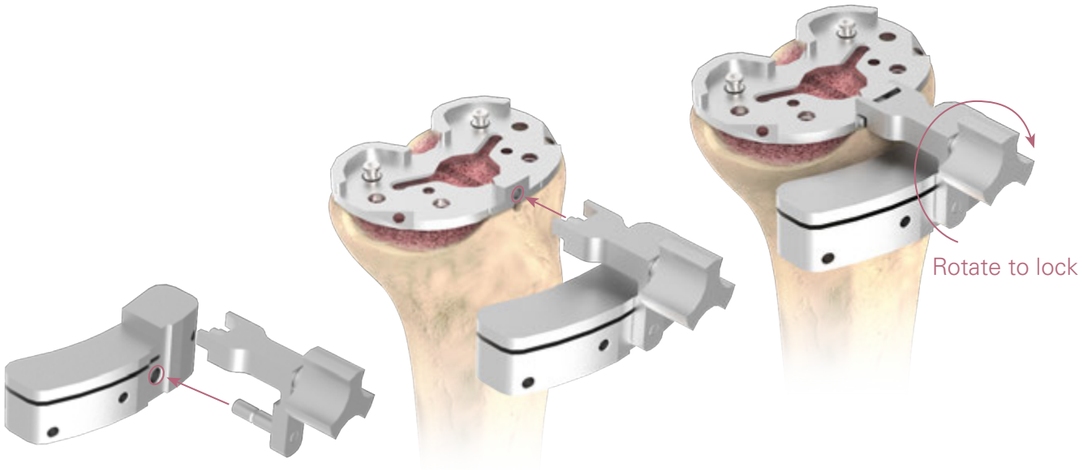

Apply the **Threaded Pins** to secure the **Tibial Augment Resection Guide** to the tibia. Then, remove the **Tibial Augment Resection Guide Adapter** and the **Tibial Baseplate Trial.**

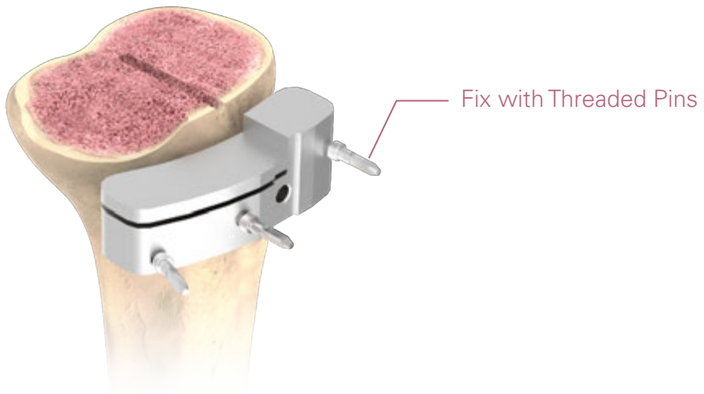

Instruments

Tibial Baseplate Trial

Threaded Pin
30 mm / 50 mm

Tibial Augment Resection Guide

Tibial Augment Resection Guide Adapter

Appendix

Perform the horizontal resection by referencing the upper plane for 5 mm augment or the slot for 10 mm augment. Finish the vertical resection referring to the center groove on the top of proximal tibia plane with osteotome or reciprocating saw.

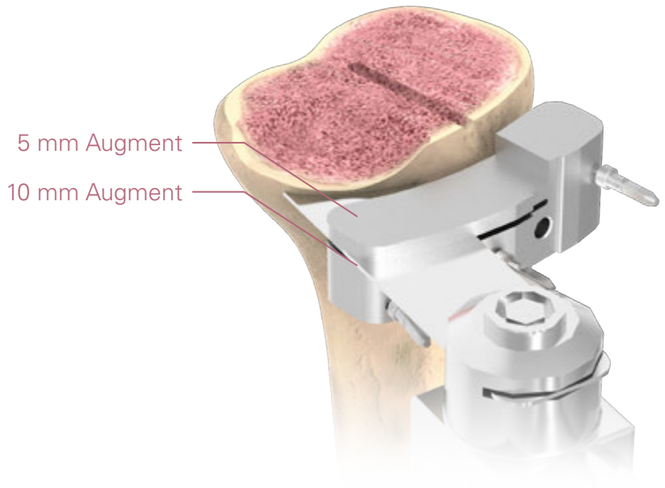

Assemble the desired **Tibial Augment Trial** to the backside of the **Tibial Baseplate Trial** and fix the trial combination onto the resected tibial surface with two **Head Pins**.

Then, attach the **Tibial Drill Guide**, **CMA** to the baseplate trial.

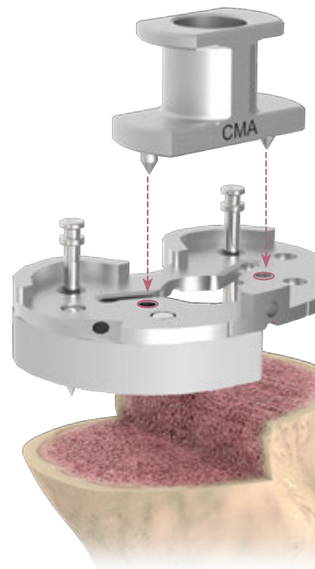

Instruments

Tibial Baseplate Trial

Threaded Pin

Tibial Augment Resection Guide

Tibial Augment Trial

Head Pin

Tibial Drill Guide, CMA

Appendix

To ensure the stability of tibial component, an extended 30 mm distal stem for the implant is recommended. Advance the **Straight Stem Drill** through the **CMA Tibial Drill Guide**, until the depth reaches the laser mark of the “0-4” or “5-7” line according to the selected size of the baseplate trial.

Remove the drill and drill guide. Resume Technique steps in Section H. Proximal Tibial Preparation and begh with selection of the correct **Tibial Punch**.

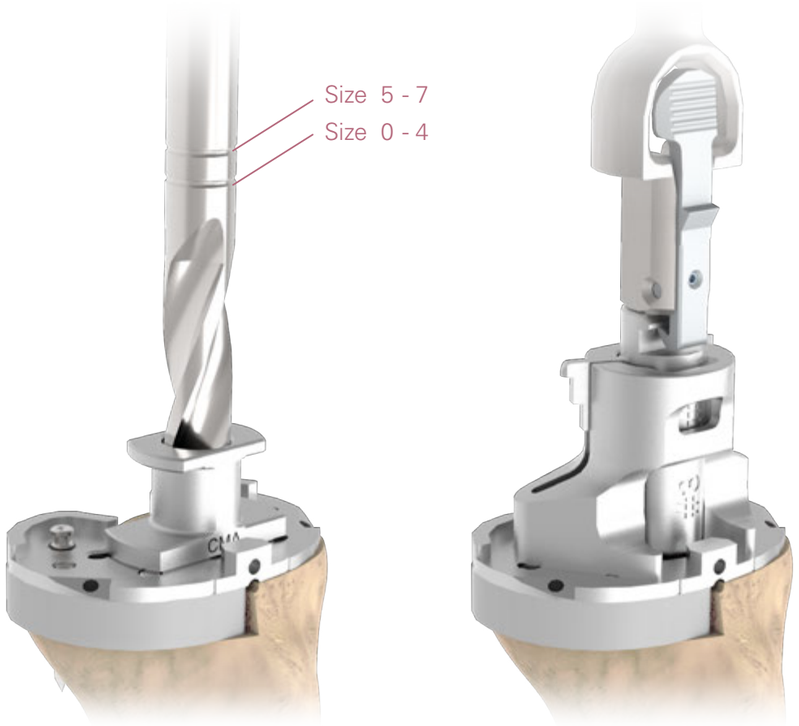

Instruments

Straight Stem Drill

Tibial Drill Guide, CMA

Tibial Punch

Tibial Punch Handle

Tibial Punch Guide

Appendix

Assemble the **Screwdriver Adapter** to the **Driver Handle**, then fasten the determined augment onto the baseplate (For CMA baseplate).

Unscrew the plug at the bottom of the baseplate via **Screwdriver, Hex 5**.
Solidly tap the stem onto the baseplate with the **Stem Impactor** to ensure the stem is firmly set.

Continue with the implant fixation.

Instruments

Screwdriver Adapter

Driver Handle

Screwdriver, Hex 5

Stem Impactor

Slotted Hammer

Order Information

Special Order Items

Femoral Component

CR

PS

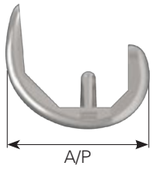

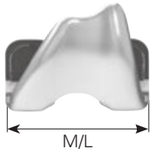

	Cemented		Porous	
	Left	Right	Left	Right
#1	2103-1310	2103-1410	2103-1110	2103-1210
#2	2103-1320	2103-1420	2103-1120	2103-1220
#3	2103-1330	2103-1430	2103-1130	2103-1230
#4	2103-1340	2103-1440	2103-1140	2103-1240
#5	2103-1350	2103-1450	2103-1150	2103-1250
#6	2103-1360	2103-1460	2103-1160	2103-1260
#7	2103-1370	2103-1470	2103-1170	2103-1270

	Cemented	
	Left	Right
#1	2103-3110	2103-3210
#2	2103-3120	2103-3220
#3	2103-3130	2103-3230
#4	2103-3140	2103-3240
#5	2103-3150	2103-3250
#6	2103-3160	2103-3260
#7	2103-3170	2103-3270

	A/P	M/L
#1	52	56
#2	56	60
#3	60	64
#4	64	68
#5	68	72
#6	72	76
#7	76	80

Unit : mm

Tibial Baseplate

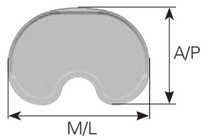

	Cemented
#1	2203-3010
#2	2203-3020
#3	2203-3030
#4	2203-3040
#5	2203-3050
#6	2203-3060

	CMA
#0	2203-3200
#1	2203-3210
#2	2203-3220
#3	2203-3230
#4	2203-3240
#5	2203-3250
#6	2203-3260
#7	2203-3270

	TPS PLUS
#0	2203-3400
#1	2203-3410
#2	2203-3420
#3	2203-3430
#4	2203-3440
#5	2203-3450
#6	2203-3460
#7	2203-3470

	A/P	M/L
#0	39.5	60
#1	42	63
#2	44.5	66
#3	47	69
#4	49.5	72
#5	52.5	76
#6	55.5	80
#7	58.5	84

Unit : mm

Order Information

Special Order Items

Tibial Insert (CR)

CR		#0	#1	#2	#3	#4	#5	#6	#7
UHMWPE	9 mm	2303-1201	2303-1211	2303-1221	2303-1231	2303-1241	2303-1251	2303-1261	2303-1271
	10 mm	2303-1206	2303-1216	2303-1226	2303-1236	2303-1246	2303-1256	2303-1266	2303-1276
	11 mm	2303-1202	2303-1212	2303-1222	2303-1232	2303-1242	2303-1252	2303-1262	2303-1272
	12 mm	2303-1207	2303-1217	2303-1227	2303-1237	2303-1247	2303-1257	2303-1267	2303-1277
	13 mm	2303-1203	2303-1213	2303-1223	2303-1233	2303-1243	2303-1253	2303-1263	2303-1273
	14 mm	2303-1208	2303-1218	2303-1228	2303-1238	2303-1248	2303-1258	2303-1268	2303-1278
	15 mm	2303-1204	2303-1214	2303-1224	2303-1234	2303-1244	2303-1254	2303-1264	2303-1274
	16 mm	2303-1209	2303-1219	2303-1229	2303-1239	2303-1249	2303-1259	2303-1269	2303-1279
	17 mm	2303-1200	2303-1210	2303-1220	2303-1230	2303-1240	2303-1250	2303-1260	2303-1270
	18 mm	2303-1205	2303-1215	2303-1225	2303-1235	2303-1245	2303-1255	2303-1265	2303-1275

XCR		#0	#1	#2	#3	#4	#5	#6	#7
XPE	9 mm	2303-1601	2303-1611	2303-1621	2303-1631	2303-1641	2303-1651	2303-1661	2303-1671
	10 mm	2303-1606	2303-1616	2303-1626	2303-1636	2303-1646	2303-1656	2303-1666	2303-1676
	11 mm	2303-1602	2303-1612	2303-1622	2303-1632	2303-1642	2303-1652	2303-1662	2303-1672
	12 mm	2303-1607	2303-1617	2303-1627	2303-1637	2303-1647	2303-1657	2303-1667	2303-1677
	13 mm	2303-1603	2303-1613	2303-1623	2303-1633	2303-1643	2303-1653	2303-1663	2303-1673
	14 mm	2303-1608	2303-1618	2303-1628	2303-1638	2303-1648	2303-1658	2303-1668	2303-1678
	15 mm	2303-1604	2303-1614	2303-1624	2303-1634	2303-1644	2303-1654	2303-1664	2303-1674
	16 mm	2303-1609	2303-1619	2303-1629	2303-1639	2303-1649	2303-1659	2303-1669	2303-1679
	17 mm	2303-1600	2303-1610	2303-1620	2303-1630	2303-1640	2303-1650	2303-1660	2303-1670
	18 mm	2303-1605	2303-1615	2303-1625	2303-1635	2303-1645	2303-1655	2303-1665	2303-1675

E-XCR		#0	#1	#2	#3	#4	#5	#6	#7
E-XPE	9 mm	2303-1801	2303-1811	2303-1821	2303-1831	2303-1841	2303-1851	2303-1861	2303-1871
	10 mm	2303-1806	2303-1816	2303-1826	2303-1836	2303-1846	2303-1856	2303-1866	2303-1876
	11 mm	2303-1802	2303-1812	2303-1822	2303-1832	2303-1842	2303-1852	2303-1862	2303-1872
	12 mm	2303-1807	2303-1817	2303-1827	2303-1837	2303-1847	2303-1857	2303-1867	2303-1877
	13 mm	2303-1803	2303-1813	2303-1823	2303-1833	2303-1843	2303-1853	2303-1863	2303-1873
	14 mm	2303-1808	2303-1818	2303-1828	2303-1838	2303-1848	2303-1858	2303-1868	2303-1878
	15 mm	2303-1804	2303-1814	2303-1824	2303-1834	2303-1844	2303-1854	2303-1864	2303-1874
	16 mm	2303-1809	2303-1819	2303-1829	2303-1839	2303-1849	2303-1859	2303-1869	2303-1879
	17 mm	2303-1800	2303-1810	2303-1820	2303-1830	2303-1840	2303-1850	2303-1860	2303-1870
	18 mm	2303-1805	2303-1815	2303-1825	2303-1835	2303-1845	2303-1855	2303-1865	2303-1875

Order Information

Special Order Items

Tibial Insert (UC)

XUC		#0	#1	#2	#3	#4	#5	#6	#7
XPE	9 mm	2303-1401	2303-1411	2303-1421	2303-1431	2303-1441	2303-1451	2303-1461	2303-1471
	10 mm	2303-1406	2303-1416	2303-1426	2303-1436	2303-1446	2303-1456	2303-1466	2303-1476
	11 mm	2303-1402	2303-1412	2303-1422	2303-1432	2303-1442	2303-1452	2303-1462	2303-1472
	12 mm	2303-1407	2303-1417	2303-1427	2303-1437	2303-1447	2303-1457	2303-1467	2303-1477
	13 mm	2303-1403	2303-1413	2303-1423	2303-1433	2303-1443	2303-1453	2303-1463	2303-1473
	14 mm	2303-1408	2303-1418	2303-1428	2303-1438	2303-1448	2303-1458	2303-1468	2303-1478
	15 mm	2303-1404	2303-1414	2303-1424	2303-1434	2303-1444	2303-1454	2303-1464	2303-1474
	16 mm	2303-1409	2303-1419	2303-1429	2303-1439	2303-1449	2303-1459	2303-1469	2303-1479
	17 mm	2303-1400	2303-1410	2303-1420	2303-1430	2303-1440	2303-1450	2303-1460	2303-1470
	18 mm	2303-1405	2303-1415	2303-1425	2303-1435	2303-1445	2303-1455	2303-1465	2303-1475

E-XUC		#0	#1	#2	#3	#4	#5	#6	#7
E-XPE	9 mm	2303-1701	2303-1711	2303-1721	2303-1731	2303-1741	2303-1751	2303-1761	2303-1771
	10 mm	2303-1706	2303-1716	2303-1726	2303-1736	2303-1746	2303-1756	2303-1766	2303-1776
	11 mm	2303-1702	2303-1712	2303-1722	2303-1732	2303-1742	2303-1752	2303-1762	2303-1772
	12 mm	2303-1707	2303-1717	2303-1727	2303-1737	2303-1747	2303-1757	2303-1767	2303-1777
	13 mm	2303-1703	2303-1713	2303-1723	2303-1733	2303-1743	2303-1753	2303-1763	2303-1773
	14 mm	2303-1708	2303-1718	2303-1728	2303-1738	2303-1748	2303-1758	2303-1768	2303-1778
	15 mm	2303-1704	2303-1714	2303-1724	2303-1734	2303-1744	2303-1754	2303-1764	2303-1774
	16 mm	2303-1709	2303-1719	2303-1729	2303-1739	2303-1749	2303-1759	2303-1769	2303-1779
	17 mm	2303-1700	2303-1710	2303-1720	2303-1730	2303-1740	2303-1750	2303-1760	2303-1770
	18 mm	2303-1705	2303-1715	2303-1725	2303-1735	2303-1745	2303-1755	2303-1765	2303-1775

Order Information

Special Order Items

Tibial Insert (PS)

PS		#0	#1	#2	#3	#4	#5	#6	#7
UHMWPE	9 mm	2303-3001	2303-3011	2303-3021	2303-3031	2303-3041	2303-3051	2303-3061	2303-3071
	10 mm	2303-3006	2303-3016	2303-3026	2303-3036	2303-3046	2303-3056	2303-3066	2303-3076
	11 mm	2303-3002	2303-3012	2303-3022	2303-3032	2303-3042	2303-3052	2303-3062	2303-3072
	12 mm	2303-3007	2303-3017	2303-3027	2303-3037	2303-3047	2303-3057	2303-3067	2303-3077
	13 mm	2303-3003	2303-3013	2303-3023	2303-3033	2303-3043	2303-3053	2303-3063	2303-3073
	14 mm	2303-3008	2303-3018	2303-3028	2303-3038	2303-3048	2303-3058	2303-3068	2303-3078
	15 mm	2303-3004	2303-3014	2303-3024	2303-3034	2303-3044	2303-3054	2303-3064	2303-3074
	16 mm	N/A	2303-3019	2303-3029	2303-3039	2303-3049	2303-3059	2303-3069	2303-3079
	17 mm	N/A	2303-3010	2303-3020	2303-3030	2303-3040	2303-3050	2303-3060	2303-3070
	18 mm	N/A	2303-3015	2303-3025	2303-3035	2303-3045	2303-3055	2303-3065	2303-3075

XPS		#0	#1	#2	#3	#4	#5	#6	#7
XPE	9 mm	2303-3601	2303-3611	2303-3621	2303-3631	2303-3641	2303-3651	2303-3661	2303-3671
	10 mm	2303-3606	2303-3616	2303-3626	2303-3636	2303-3646	2303-3656	2303-3666	2303-3676
	11 mm	2303-3602	2303-3612	2303-3622	2303-3632	2303-3642	2303-3652	2303-3662	2303-3672
	12 mm	2303-3607	2303-3617	2303-3627	2303-3637	2303-3647	2303-3657	2303-3667	2303-3677
	13 mm	2303-3603	2303-3613	2303-3623	2303-3633	2303-3643	2303-3653	2303-3663	2303-3673
	14 mm	2303-3608	2303-3618	2303-3628	2303-3638	2303-3648	2303-3658	2303-3668	2303-3678
	15 mm	2303-3604	2303-3614	2303-3624	2303-3634	2303-3644	2303-3654	2303-3664	2303-3674
	16 mm	N/A	2303-3619	2303-3629	2303-3639	2303-3649	2303-3659	2303-3669	2303-3679
	17 mm	N/A	2303-3610	2303-3620	2303-3630	2303-3640	2303-3650	2303-3660	2303-3670
	18 mm	N/A	2303-3615	2303-3625	2303-3635	2303-3645	2303-3655	2303-3665	2303-3675

E-XPS		#0	#1	#2	#3	#4	#5	#6	#7
E-XPE	9 mm	2303-3801	2303-3811	2303-3821	2303-3831	2303-3841	2303-3851	2303-3861	2303-3871
	10 mm	2303-3806	2303-3816	2303-3826	2303-3836	2303-3846	2303-3856	2303-3866	2303-3876
	11 mm	2303-3802	2303-3812	2303-3822	2303-3832	2303-3842	2303-3852	2303-3862	2303-3872
	12 mm	2303-3807	2303-3817	2303-3827	2303-3837	2303-3847	2303-3857	2303-3867	2303-3877
	13 mm	2303-3803	2303-3813	2303-3823	2303-3833	2303-3843	2303-3853	2303-3863	2303-3873
	14 mm	2303-3808	2303-3818	2303-3828	2303-3838	2303-3848	2303-3858	2303-3868	2303-3878
	15 mm	2303-3804	2303-3814	2303-3824	2303-3834	2303-3844	2303-3854	2303-3864	2303-3874
	16 mm	N/A	2303-3819	2303-3829	2303-3839	2303-3849	2303-3859	2303-3869	2303-3879
	17 mm	N/A	2303-3810	2303-3820	2303-3830	2303-3840	2303-3850	2303-3860	2303-3870
	18 mm	N/A	2303-3815	2303-3825	2303-3835	2303-3845	2303-3855	2303-3865	2303-3875

Order Information

All Poly Tibial Component

APT-CR		#1	#2	#3	#4	#5	#6	#7
UHMWPE	9 mm	2203-1011	2203-1021	2203-1031	2203-1041	2203-1051	2203-1061	2203-1071
	11 mm	2203-1012	2203-1022	2203-1032	2203-1042	2203-1052	2203-1062	2203-1072
	13 mm	2203-1013	2203-1023	2203-1033	2203-1043	2203-1053	2203-1063	2203-1073
	15 mm	2203-1014	2203-1024	2203-1034	2203-1044	2203-1054	2203-1064	2203-1074
	18 mm	2203-1015	2203-1025	2203-1035	2203-1045	2203-1055	2203-1065	2203-1075

APT-PS		#1	#2	#3	#4	#5	#6	#7
UHMWPE	9 mm	2203-1211	2203-1221	2203-1231	2203-1241	2203-1251	2203-1261	2203-1271
	11 mm	2203-1212	2203-1222	2203-1232	2203-1242	2203-1252	2203-1262	2203-1272
	13 mm	2203-1213	2203-1223	2203-1233	2203-1243	2203-1253	2203-1263	2203-1273
	15 mm	2203-1214	2203-1224	2203-1234	2203-1244	2203-1254	2203-1264	2203-1274
	18 mm	2203-1215	2203-1225	2203-1235	2203-1245	2203-1255	2203-1265	2203-1275

APT-UC		#1	#2	#3	#4	#5	#6	#7
UHMWPE	9 mm	2203-1411	2203-1421	2203-1431	2203-1441	2203-1451	2203-1461	2203-1471
	11 mm	2203-1412	2203-1422	2203-1432	2203-1442	2203-1452	2203-1462	2203-1472
	13 mm	2203-1413	2203-1423	2203-1433	2203-1443	2203-1453	2203-1463	2203-1473
	15 mm	2203-1414	2203-1424	2203-1434	2203-1444	2203-1454	2203-1464	2203-1474
	18 mm	2203-1415	2203-1425	2203-1435	2203-1445	2203-1455	2203-1465	2203-1475

Order Information

Special Order Items

Patellar Component

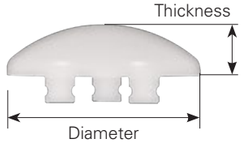

Onset Patella

	XS	S	M	L	XL	XXL	EL
UHMWPE	2403-1010	2403-1020	2403-1030	2403-1040	2403-1050	2403-1060	2403-1070
XPE	2403-3210	2403-3220	2403-3230	2403-3240	2403-3250	2403-3260	2403-3270
E-XPE	2403-5210	2403-5220	2403-5230	2403-5240	2403-5250	2403-5260	2403-5270

Thickness	7	8	8.5	9	9.5	10	10.5
Diameter	26	29	32	35	38	41	44

Unit : mm

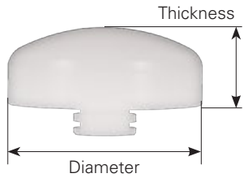

Inset Patella

	S	M	L	XL
UHMWPE	2401-1010	2401-1020	2401-1030	2401-1040
XPE	2403-3010	2403-3020	2403-3030	2403-3040
E-XPE	2403-5010	2403-5020	2403-5030	2403-5040

Thickness	8	10	10	10
Diameter	22	25	28	32

Unit : mm

Extensions (CMA)

Augment

Straight Stem

Ø14 x 30 mm
2703-5003

	#0	#1	#2	#3	#4	#5	#6	#7
5 mm	2803-5201	2803-5211	2803-5221	2803-5231	2803-5241	2803-5251	2803-5261	2803-5271
10 mm	2803-5202	2803-5212	2803-5222	2803-5232	2803-5242	2803-5252	2803-5262	2803-5272

Reference

[1] Data held on file. United Orthropedic Corporation

Size Pairing Chart

UC Insert

Insert	Tibial Baseplate	Femoral												
		#1	#1.5	#2	#2.5	#3	#3.5	#4	#4.5	#5	#5.5	#6	#6.5	#7
#0	#0	●												
#1	#1	●	●	●										
#2	#2	●	●	●	●	●								
#3	#3			●	●	●	●	●						
#4	#4					●	●	●	●	●				
#5	#5							●	●	●	●	●		
#6	#6									●	●	●	●	●
#7	#7											●	●	●

Instrument Tray Guide

4 Trays with Reusable Trials

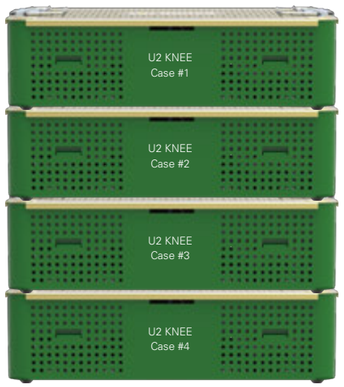

CMA Case

Size 7 Case

PS/CR Femoral Component (Lt/Rt)	Tibial Insert	Tibial Baseplate	Onset Patella
7 Sizes	8 Sizes 10 Thicknesses	8 Sizes	7 Sizes
			Inset Patella
			4 Sizes

UNITED ORTHOPEDIC®

Each Step
We Care

Please note that this Surgical Technique Guide has been authored in the English language. Any translations into other languages have not been reviewed or approved by United Orthopedic Corporation and their accuracy cannot be confirmed. Any translated guide should be reviewed carefully prior to use and questions regarding a Surgical Technique Guide should be directed to United Orthopedic Corporation at unitedorthopedic.com/contact

The CE mark is valid only if it is also printed on the product label.

CE 2797

UNITED ORTHOPEDIC®

© 2021 United Orthopedic Corporation. UOC-UM-UN-00063 Rev.1 FEB.2021